dGate

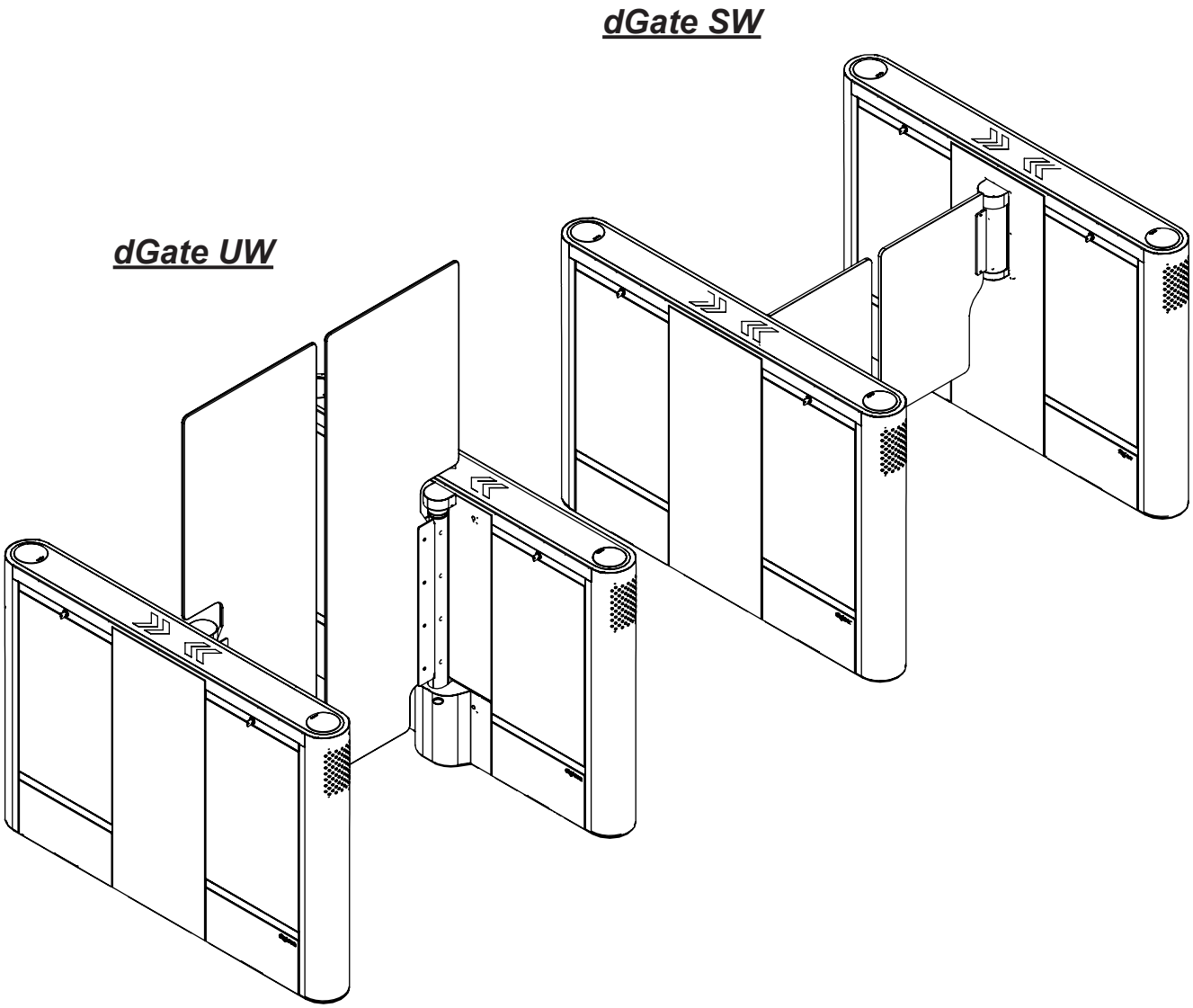

digicon

Copyright - Digicon S.A. Controle Eletrônico para Mecânica

All rights reserved. No part of this publication shall be reproduced, transmitted, transcribed, filed in a recovery system, or translated to any human or computer language through electronic, magnetic, optical, chemical, or manual means, or otherwise, without the express written permission of Digicon S.A.

Code: 069.31.275

Version: 01 - English

This manual was written by: Digicon S.A. Controle Eletrônico para Mecânica

Documentation Sector - EDS

“After the product’s lifespan, discard it according to the National Waste Policy.”

Revision	Date	Reviewer	History
01	03/02/2022	• Ezequiel Kellerman • Nicholas Hahn; • Igor Cunha • Leandro Dandolini	• New dGate manual

Obs.: If you wish to see the history of every version of this manual, get in touch with your representative or with Digicon.

⚠ ***ATTENTION!:*** Digicon shall have the right to change its products' characteristics at any moment to adapt them to the most recent technological developments.

⚠ ***ATTENTION!:*** Digicon shall have the right to change the information contained herein without prior notice.

Contents

1.Presentation 7
2. Safety Instructions 8
2.1 Symbols 8
2.2 Terminology 9
2.3 Risks ⚠ 9
2.3.1 Equipment unpacking risk 10
2.3.2 Equipment installation risks 10
2.3.3 Equipment use risks 11
2.3.4 Equipment maintenance risks 12
2.3.5 Equipment cleaning process risks 12
3. dGate's Features 13
3.1 Functional description 15
4. Unpacking, Installation, and Electric Connection 17
4.1 Package opening 17
4.1.1 Package dimensions 18
4.1.2 Necessary tools: 18
4.1.3 Steps to open the package: 19
4.1.4 Key parts of the product 22
4.2 Installation 24
4.2.1 Before installing your dGate, check 24
4.2.2 Positioning and fixation on the floor 25
4.3 Access to dGate after fixation 30
4.4 Electric connection 31
4.4.1 Electric panel 31
5. Interconnections 33
5.1 Basic wiring 34
5.2 Connection to the electric network 37
5.3 Connection of the control signals 38

6. Identification of the Internal Parts and Functionalities 41
6.1 MCP control board 41
6.2 Pictograms 42
6.3 Sensor barriers 44
6.4 Antipanic 45
6.5 Functionalities 46
6.5.1. Anti-crush protection system 46
6.5.2 Door speed configuration 47
6.5.3 Access control configuration with open doors 48
6.5.4 Anti-crush protection system 48
6.5.5 Passage timeout 50
6.5.6 Passage direction detection 51
6.5.7 User return detection 51
6.5.8 Idle user detection 52
6.5.9 Gate trespassing detection 53
6.5.10 “Tailgating” user detection 53
6.5.11 Asset safety zone definition 54
6.5.12 Passage authorization accumulation 55
7. Optional Items 56
7.1 Card collector kit 56
7.2 Digicon MCA board 57
8. Maintenance 58
8.1 Door 58
8.1.1 Calibration routine 59
8.2 Troubleshooting 61
8.3 Preventive maintenance 62
8.3.1 Preventive action table 62

9. Technical Characteristics 65
9.1 Dimensions 65
9.2 Other information 68
10. Cleaning 69
10.1 Stainless steel maintenance and conservation 69
10.2 Polycarbonate (door) maintenance and conservation 71
11. Warranty and Customer Support 73
Notes: 74

1.Presentation

When innovation meets robustness and design meets trustworthiness, you have the best solution in access control. Every detail of Digicon's solution was made to bring innovation, quality, and design to the access control market. dGate was born in result of an intense research process of world trends and an exhaustive engineering work.

Find out more about our products accessing our website using the QR Code below:

2. Safety Instructions

2.1 Symbols

You are going to find the symbols below in the Product Manual. They point to important Attention and Careful notifications regarding equipment safety, installation, operation, and maintenance.

⚠ ***ATTENTION!:*** Describes something important of which the qualified technical person and the user should be aware.

⚠ ***CAREFUL - RISK OF LESION/INJURY!:*** Describes risk situations that may lead to lesions and/or injuries.

⚠ ***CAREFUL - RISK OF DEATH!:*** Describes high risk situations that may lead to death. These cases are related to the interaction with the internal part of the equipment, and it is advisable to employ a qualified technical person.

Read and keep the instructions of this manual: Read and keep this Product Manual for future reference. Read carefully all safety, unpacking, installation, operation, and maintenance instructions before operating this equipment.

Follow the instructions and the attention and careful notifications: Follow all installation, operation/use, and maintenance instructions. Pay close attention to all attention, careful, and precaution notifications in the operation instructions, as well those attached to this equipment. The attention and careful notifications are essential for the user's and the **qualified technical person's** protection and for the equipment's use longevity.

2.2 Terminology

The terms defined below are used in this document. These definitions are based on those found in the safety standards:

Qualified Technical Person: The term **qualified technical person** is applied to people trained and qualified by Digicon and that are allowed to install, replace, or provide technical assistance to its equipment. It is recommended that the **qualified technical person** may use his/her experience, technical skills, and good practice to avoid possible injuries to him/herself and to others due to risks that exist in restrict access areas. It should be done to mitigate risks and to increase the equipment's lifespan.

⚠ ***ATTENTION!:*** IInstallations and/or maintenance performed by an unqualified technician can make the equipment's warranty void.

User: This term is applied to an individual that is not a **qualified technical person** and that uses the equipment.

2.3 Risks ⚠

The safety information and notifications below are made available to protect you from injuries and to avoid damaging the equipment.

Children and people that require assistance may be unable to identify the risks associated to the use of the equipment and can get hurt or put themselves in life-threatening situations.

Be attentive also to animals that are close to the equipment.

The risks with which you should be attentive in several situations are listed below.

2.3.1 Equipment unpacking risk

⚠ ***ATTENTION!:***

- Always use the proper tools;
- Always use the required PPEs (gloves, shoes, and safety goggles).

⚠ ***CAREFUL - RISK OF LESION/INJURY!:***

- Be careful while handling the equipment package because it is made out of wood and may have splinters;
- The package is heavy, so do not let it drop because it could cause injuries and damage the equipment;
- Thin steel sheets are used to make the package and they can cause cuts and wounds;
- Be careful while lifting the cover of the package because it can fall and cause injuries and damage the equipment;
- To unscrew the equipment from the package's base, remove the side glass doors. Handle them carefully, placing them in a safe spot;
- Be careful with your hands and feet while removing the equipment from the package's base and positioning it on the installation spot

2.3.2 Equipment installation risks

⚠ ***ATTENTION!:***

- All installation steps should be performed by a qualified technical person and the proper tools and PPEs should be used;
- Before connecting it to the electrical grid, carefully inspect the installation.

⚠ ***CAREFUL - RISK OF LESION/INJURY!:***

- Be careful while positioning this equipment on the installation site because its size and weight can cause injuries;
- During the initial stage of operation, the doors can move. Leave the passage area free to avoid them bumping objects and people.

⚠ ***CAREFUL - RISK OF DEATH!:***

- This equipment works with dangerous voltages. To avoid being shocked, the installation should be exclusively made by a qualified technical person;
- Before performing any procedure, make sure that the power is off.

2.3.3 Equipment use risks

⚠ ***CAREFUL - RISK OF LESION/INJURY!:***

- Careful! This is an access control equipment, and the doors can close in some situations. If the doors bump into someone, it can cause bruises and even fractures;

⚠ ***CAREFUL - RISK OF DEATH!:***

- Children and people that require assistance should be constantly supervised because they may be unable to identify the risks associated to the use of the equipment and can get hurt or put themselves in life-threatening situations.

2.3.4 Equipment maintenance risks

⚠ ***ATTENTION!:***

- All maintenance steps should be done by a qualified technical person and the proper tools and PPEs should be used

⚠ ***CAREFUL - RISK OF LESION/INJURY!:***

- Take good care of your hands and fingers during the maintenance process because the moving mechanisms of the door can cause serious injuries.

⚠ ***CAREFUL - RISK OF DEATH!:***

- The equipment has several glass pieces. Always use safety goggles;
- Before performing any procedure, make sure that the power is off;
- Failing to observe the recommendations above can result in serious injuries and in the risk of death.

2.3.5 Equipment cleaning process risks

⚠ ***ATTENTION!:***

- Use all necessary PPEs during the cleaning process (gloves and safety goggles).

⚠ ***CAREFUL - RISK OF LESION/INJURY!:***

- Be careful during the cleaning process because the doors can close in some situations. If the doors bump into someone, it can cause bruises and even fractures;
- The side doors that grant access to the equipment and the upper covers are made out of glass, so be careful not to push them too hard;
- In the cleaning chapter of this manual, there is a list of which products are suitable to clean the equipment. Using the proper products protects the equipment and the skin of those who clean it.

3. dGate's Features

1. dGate has a motorized system to open and close the access doors, which are activated once an approved user is identified and authorized to enter. A sensor system is employed to identify and prevent unauthorized people from entering or the attempt of "tailgating," as well as to protect dGate's users from harm.
2. Made out of high-durability stainless steel. Versions in carbon steel with epoxy painting on request;
3. Models available with SW (Swing or pivot) doors, made out of 12 mm thick polycarbonate;
4. Side doors that open with keys to access the internal part of the equipment, facilitating the access to its configuration and maintenance;
5. Specific microprocessor controller that allows you to configure a set of operational parameters to optimize the passage flow, and the asset and personal safety;
6. dPower high-performance brushless motors enable the doors to move silently and efficiently;
7. It has a configurable audible signal (Beep) for access control;
8. Detection system: ten infrared sensors to detect passage, and asset and user safety functionalities;
9. Anti-crush system: the doors open when an obstacle is detected;
10. Antifraud system with audible notification and detection of attempt of "tailgating" user, attempt of passage on the opposite direction, and attempt of passage without validation;
11. Direction control. The following access modes are allowed:
    - Controlled access in the entrance and exit directions;
    - Controlled access only in the entrance direction, free or locked exit;
    - Controlled access only in the exit direction, free or locked entrance;
    - Access locked in the entrance and exit directions;
    - Free access in the entrance and exit directions.
12. Emergency opening: manual opening in case of power failure or automatic opening on emergency alarm activation;

13. It has a specific internal space to integrate access control devices, identification systems (tags, biometric, etc.), etc;
14. Full-range power supply (from 100 to 240Vca);
15. Low energy consumption in standby mode;
16. Upper operation pictogram expandable up to two RGB led modules of high brightness and color control (request the configuration you desire at the moment of purchase);
17. Front orientation pictogram with RGB leds;
18. Microcontroller dedicated to motor control;
19. Door positioning control monitored by a magnetic encoder, free from mechanical wearing;
20. Side glass doors or, optionally, stainless steel doors;
21. It allows the installation of a proximity reader at the ends;
22. Available with the 2D barcode reader option;
23. Available with the biometric reader option;
24. Model available with 520 mm and 920 mm width passage to serve people with special needs (PSN).

3.1 Functional description

dGate has a motorized system to open and close the access doors, which are activated once a user is identified and authorized to enter. A sensor system is employed to identify and prevent unauthorized people from entering or the attempt of “tailgating.” These sensors also protect the users from harm.

The equipment’s operation mechanism is activated by a brushless permanent magnet motor.

Since the motor does not employ a set of brushes to perform the electric activation, there is no mechanical wearing of electric contacts, extending the motor’s lifespan.

To assemble a passage, you will always need two modules. On the right side, monitoring the passage from the free area to the controlled area, there will be a **Receiver**-type module; on the other side, on the left, there will mandatorily be a **Transmitter**-type module or a **Receiver/Transmitter** module, if there is more than one passage.

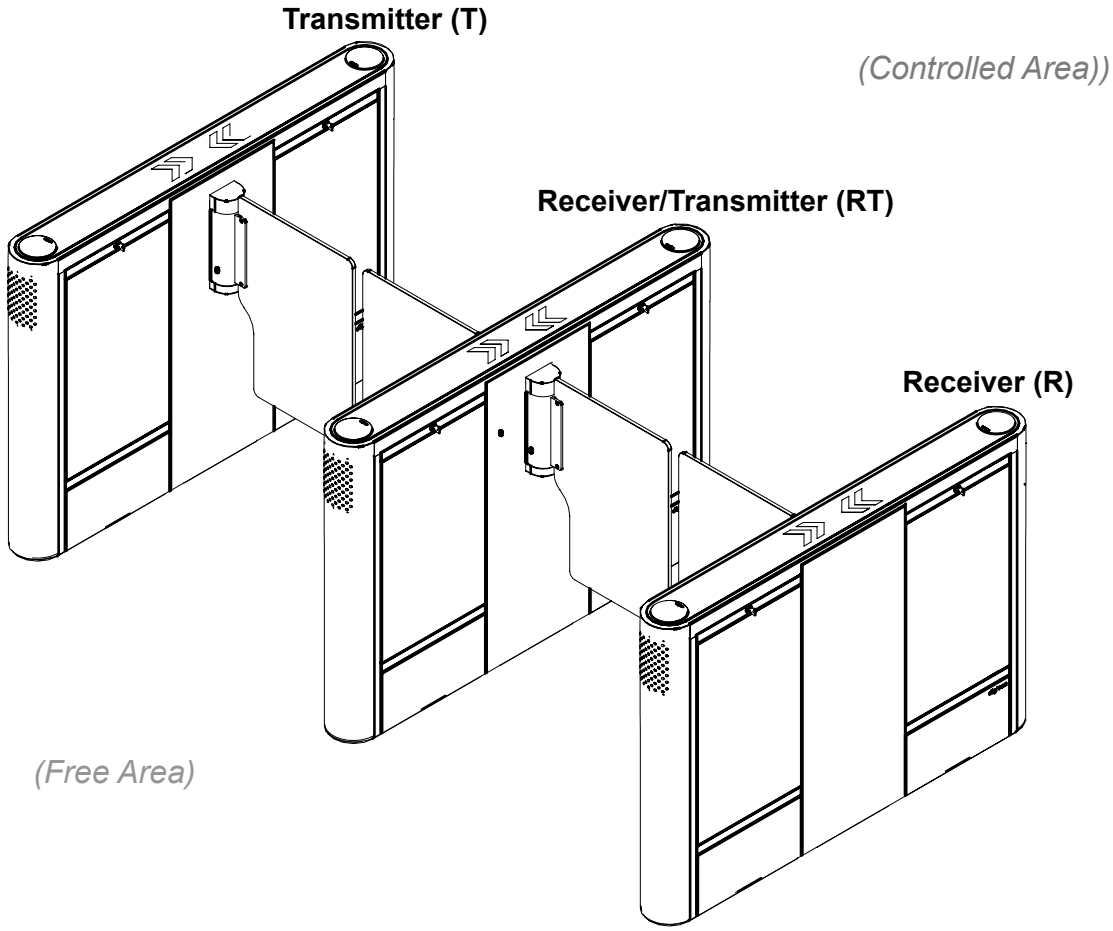

Receiver (R): It is the side that has the receiving sensors and the electric panel, where are installed: the interconnection board, the passage control module (MCP), the power terminal strip (BN1), and the source module.

Transmitter (T): It is the side that has the transmitter sensors and the dGate interconnection board. By default, all interconnection cables are installed in the Transmitter side.

⚠ ***ATTENTION! -*** To assemble a full layout, with more than one passage, there are hybrid door modules called RT (Receiver+Transmitter).

Receiver e Transmitter (RT): It is a module than has a Receiving side and a Transmitting side. All sets described above in R and T are installed in this module.

4. Unpacking, Installation, and Electric Connection

⚠ ***ATTENTION! -*** This equipment should be installed only by qualified technical persons. The installation should observe all local standards and regulations.

4.1 Package opening

Since the items in the package can vary (depending on what the client requested), it is extremely important that you carefully visually check it before you begin the installation and assembling process. All Digicon packages come with a checklist to guide you in this inspection.

⚠ ***ATTENTION!*** - Check if the package is not damaged at the receipt of the equipment. If it is, take pictures of it and send them to the transport company responsible.

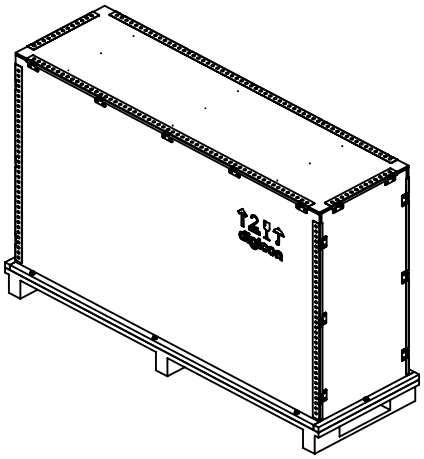

⚠ ***CAREFUL - RISK OF LESION/INJURY!:*** The package is heavy. It weights around 140/150 kg. You will need to use the proper transportation equipment to carry it, like a pallet truck;

⚠ ***CAREFUL - RISK OF LESION/INJURY!:*** Always use the necessary PPEs (gloves, shoes, and safety goggles).

4.1.1 Package dimensions

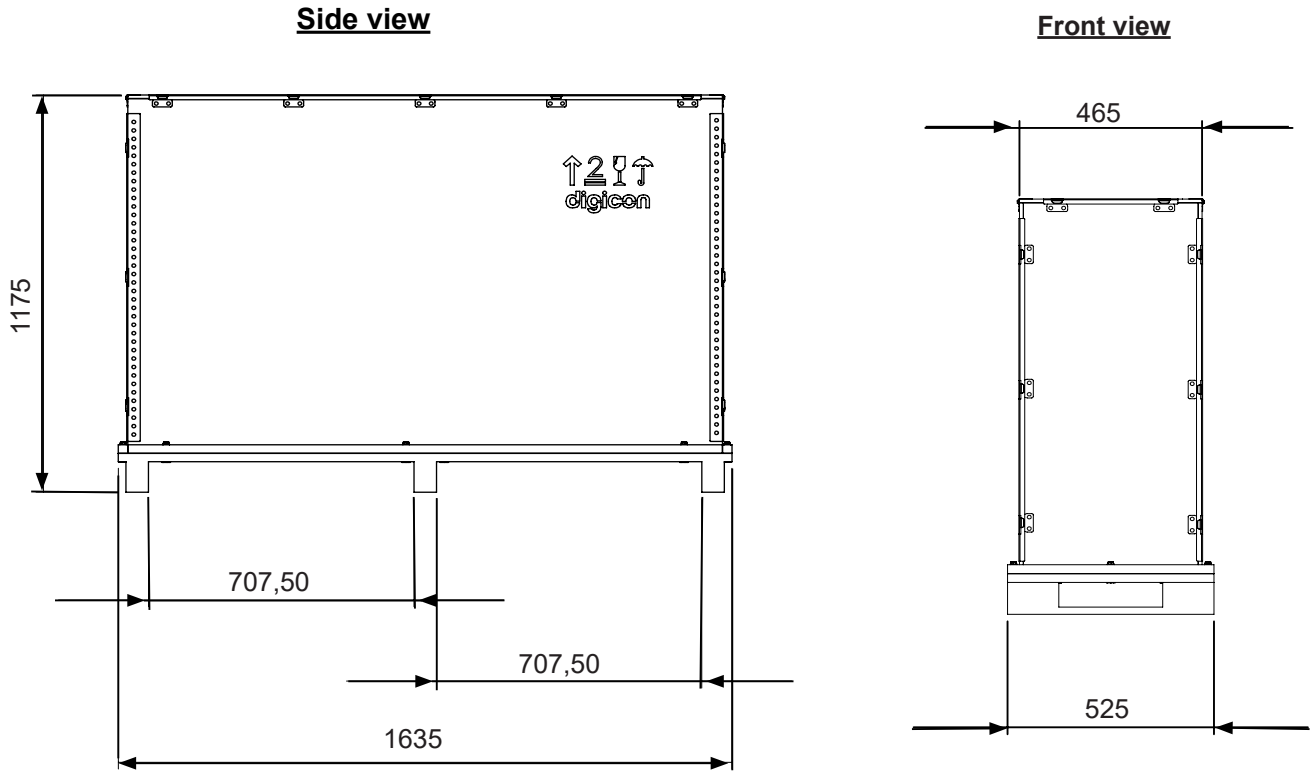

⚠ ***ATTENTION! -*** The dGate package measures are illustrated in millimeters

4.1.2 Necessary tools:

- 1 medium-sized screwdriver (to unpack);
- 2 combination wrenches (or with ratchet) 17 mm;
- 1 combination wrench (or with ratchet) 13 mm;
- Safety gloves (PPE).

⚠ ***CAREFUL - RISK OF LESION/INJURY!:*** The package's metallic parts can cut the individuals handling it.

4.1.3 Steps to open the package:

1. Unscrew the outer part of the box. There are three screws on each side, one screw on the front, and another screw on the back, totaling eight hexagonal screws.

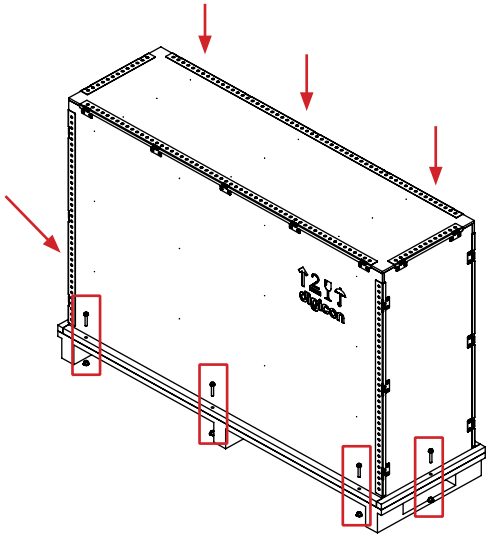

2. Lift the cover of the box vertically. It ideally should be done by two people. Lift until the cover is above the module.

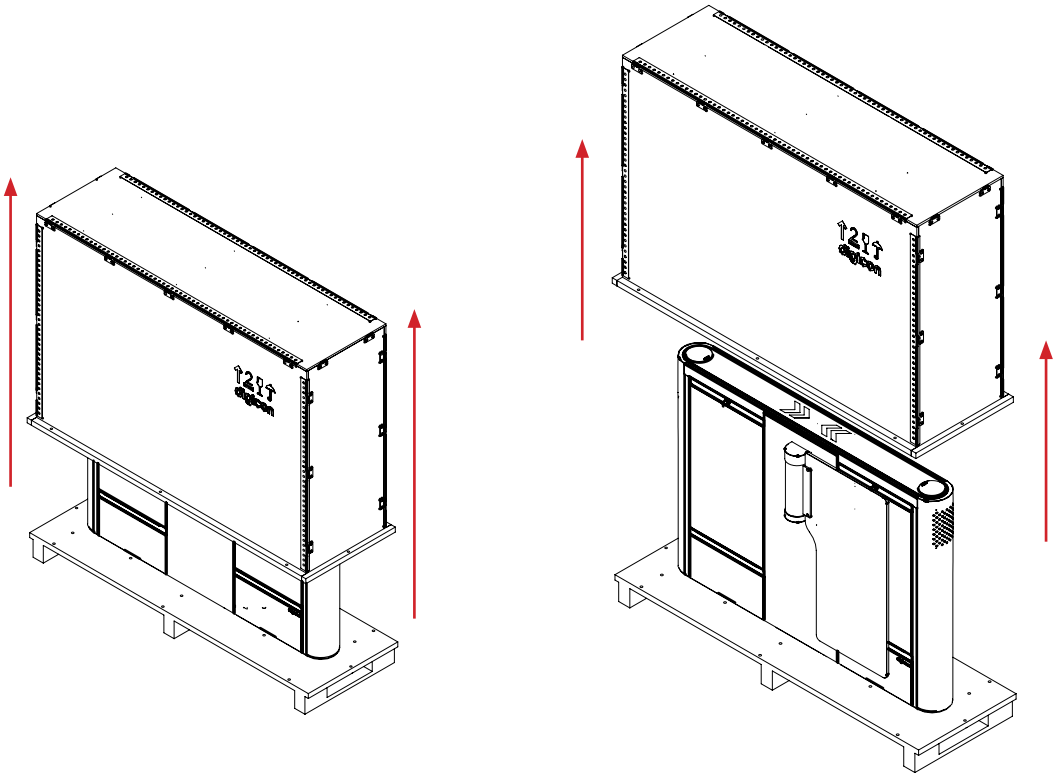

3. Once the cover is removed, you will need to remove the side doors of the module to access the screws attaching it to the bottom of the package (pallet). The keys of the doors are in a package that comes with the user's information and orientation guide.

⚠ ***CAREFUL! -*** The side doors can be made out of glass, so handle them carefully to avoid breaking them or hurt the technician or user.

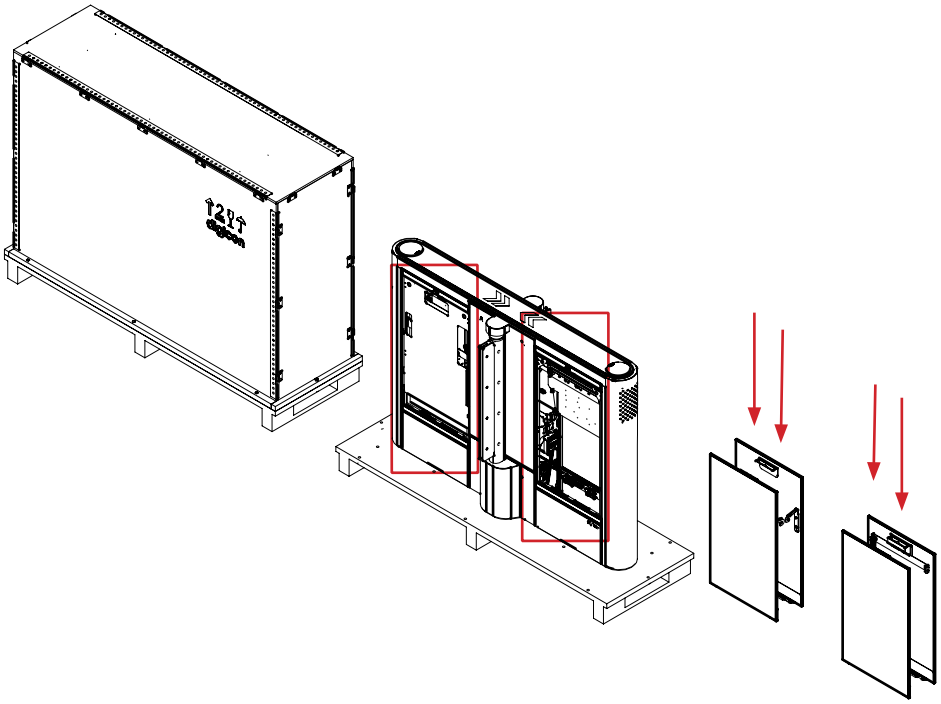

4. Remove the eight screws attaching the module to the pallet (use both 17 mm wrenches).

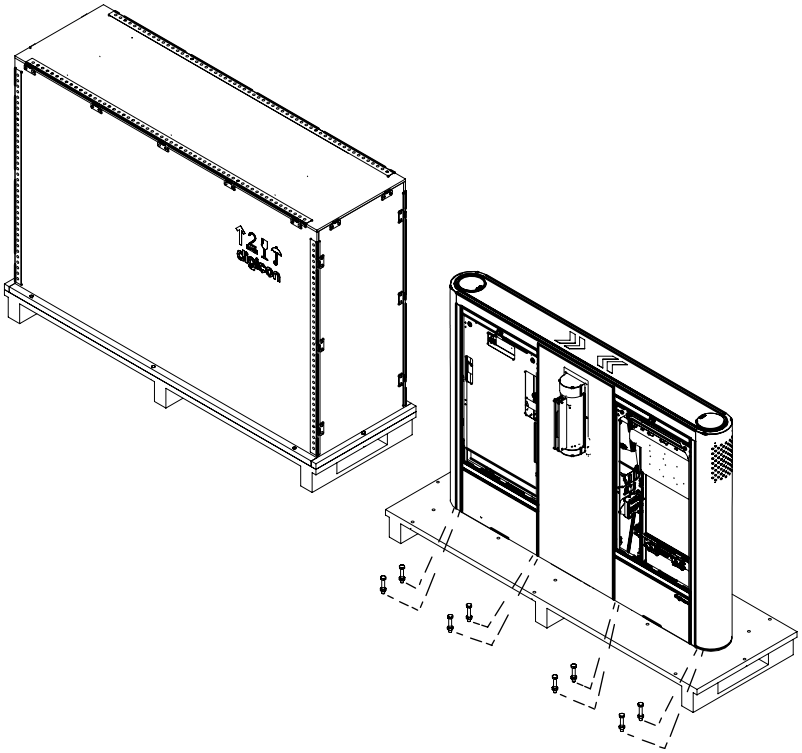

5. Remove the module from the pallet and place it on the desired spot

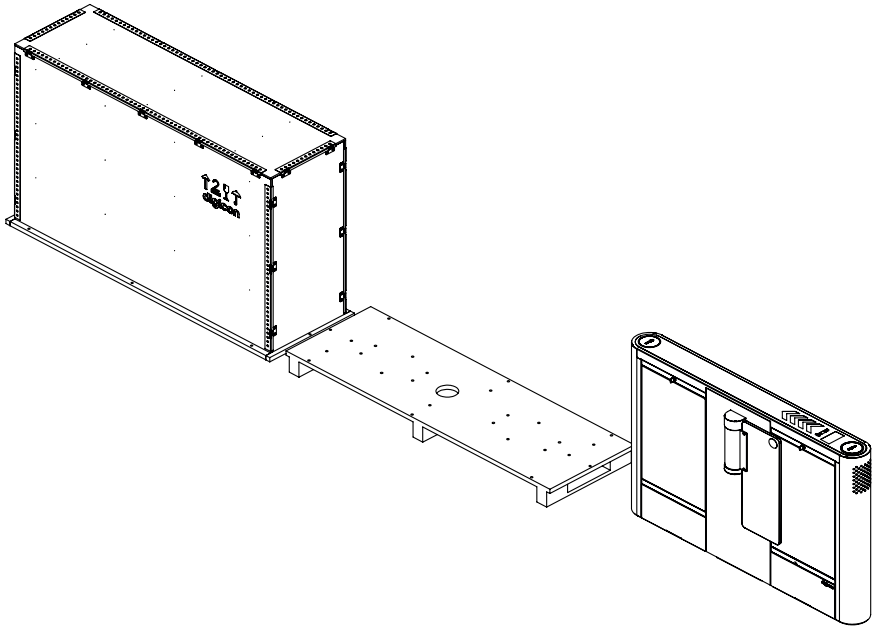

⚠ ***CAREFUL - RISK OF LESION/INJURY!:*** At least two people are necessary to move the module.

⚠ ***ATTENTION! -*** Do not throw the package's cover away. It can be used to protect the equipment after its installation.

4.1.4 Key parts of the product

The equipment's outer parts are listed below and identified with numbers in the pictures:

1. Opening for the card collector set (optional);
2. Gate UW doors in glass (10mm) and dGate SW doors in polycarbonate (12mm);
3. Side access hatches to the electric parts and to the door locking mechanism (glass or stainless steel);
4. Place for optional reader (biometry, bars, Mifare, etc.);
5. Orientation pictogram (frontal);
6. Upper cover (glass or stainless steel);
7. Operation pictogram (upper).

dGate UW:

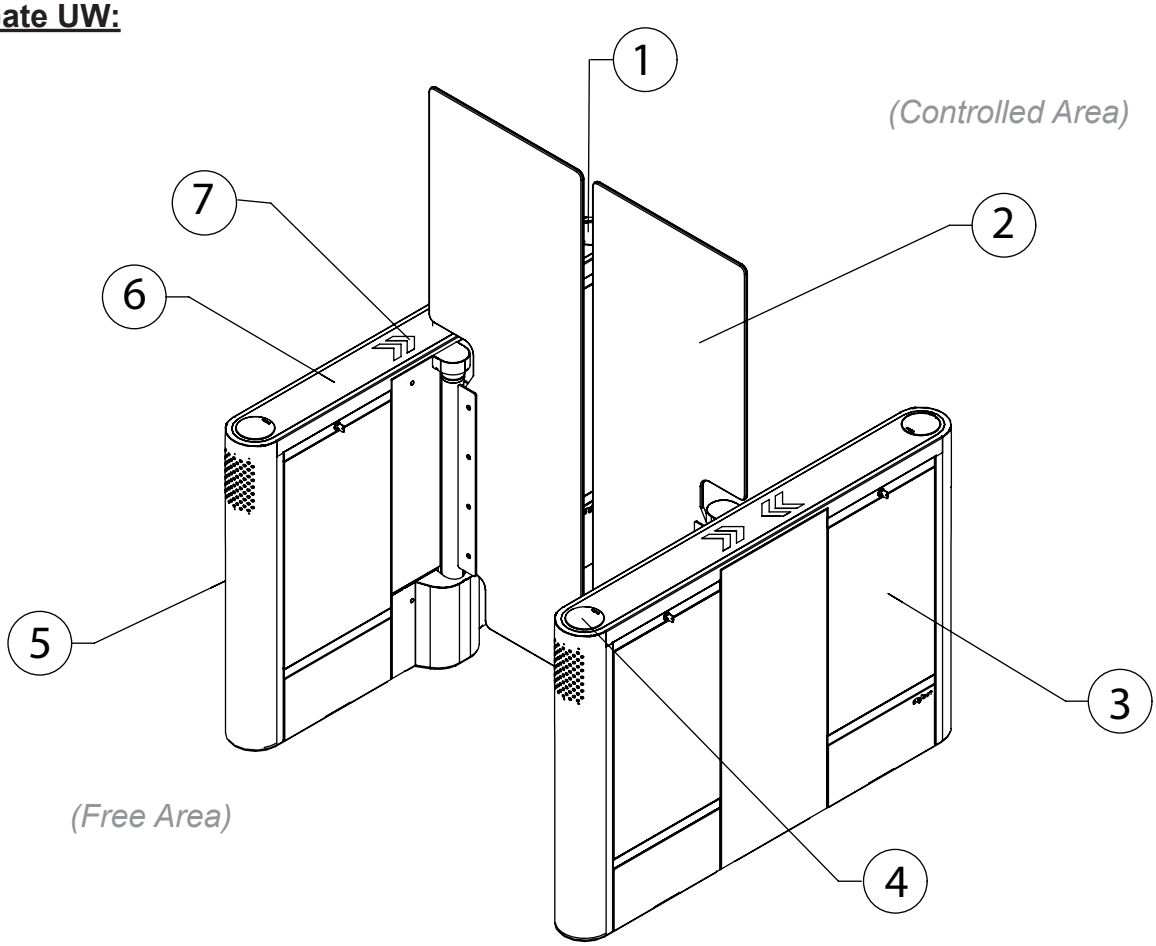

dGate SW:

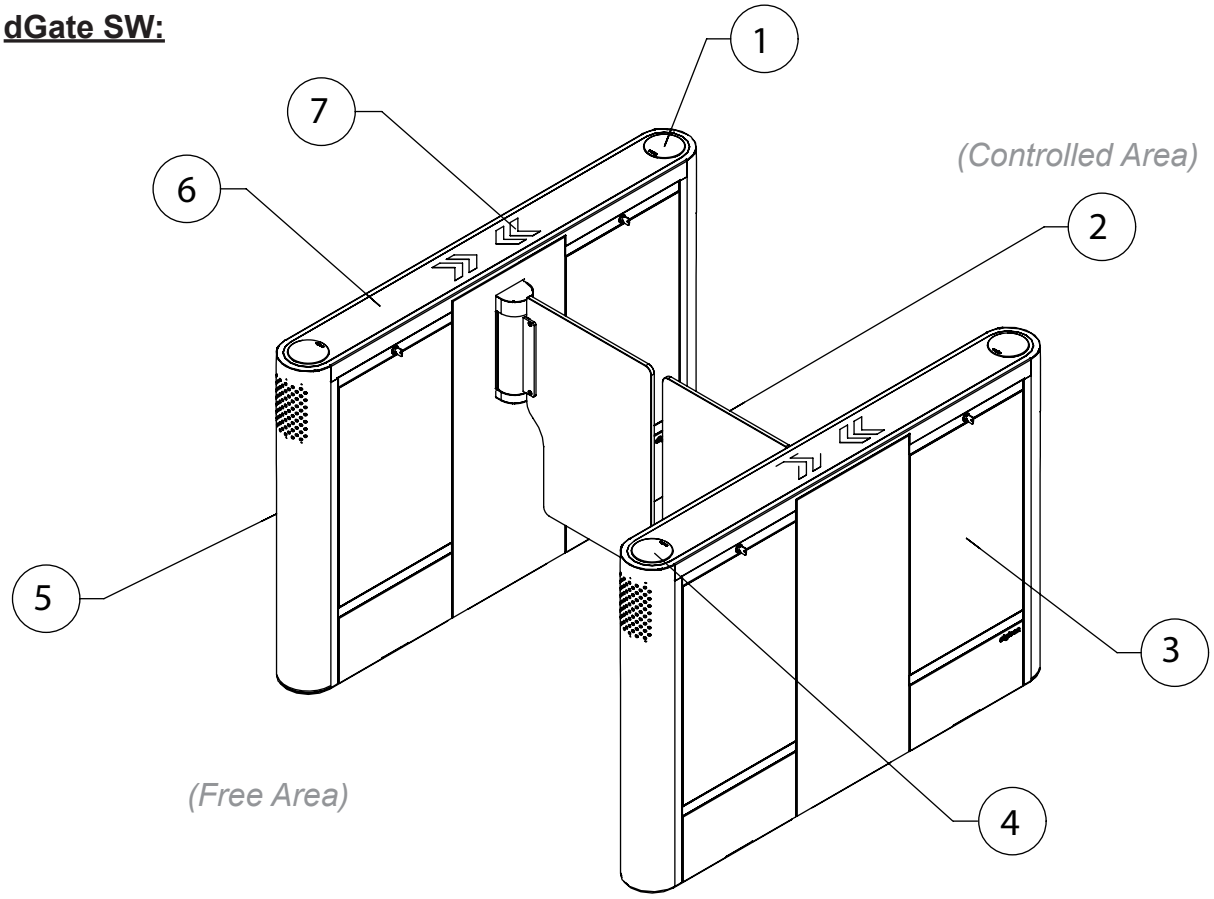

4.2 Installation

4.2.1 Before installing your dGate, check

- If the spot chosen to install the equipment is firm and leveled. It should respectively satisfy the following flatness and leveling requirements: *(Standards: ASTM E 1155-96 and ACI 117-90).*

  PP ≥ 25 (Flatness)

  NP ≥ 20 (Levelness)
- •If there is a power source next to the spot, compatible with the equipment's consumption;
- •If the chosen spot is suitable to install the access controller (covered environments);
- •If the floor can receive anchor bolts (at least 4 cm of FCK15 M.P.A. concrete or equivalent). Digicon recommends anchor bolts of the HILT brand;
- •If the embedding boxes and conduits for the electric and data cables are properly installed;
- •If every necessary tool is available;
- •If every PPE necessary for installation is available.
- ⚠ ***ATTENTION! -*** Since it is necessary to drill the floor to install your dGate, it is extremely important to choose the installation spot carefully.

4.2.2 Positioning and fixation on the floor

The pictures below indicate the position of the embedding boxes that should be previously installed before the dGate if fixed to the floor and also the fixation points' layout.

The surface must be firm and leveled to ensure the proper alignment of the sensors.

Embedding boxes:

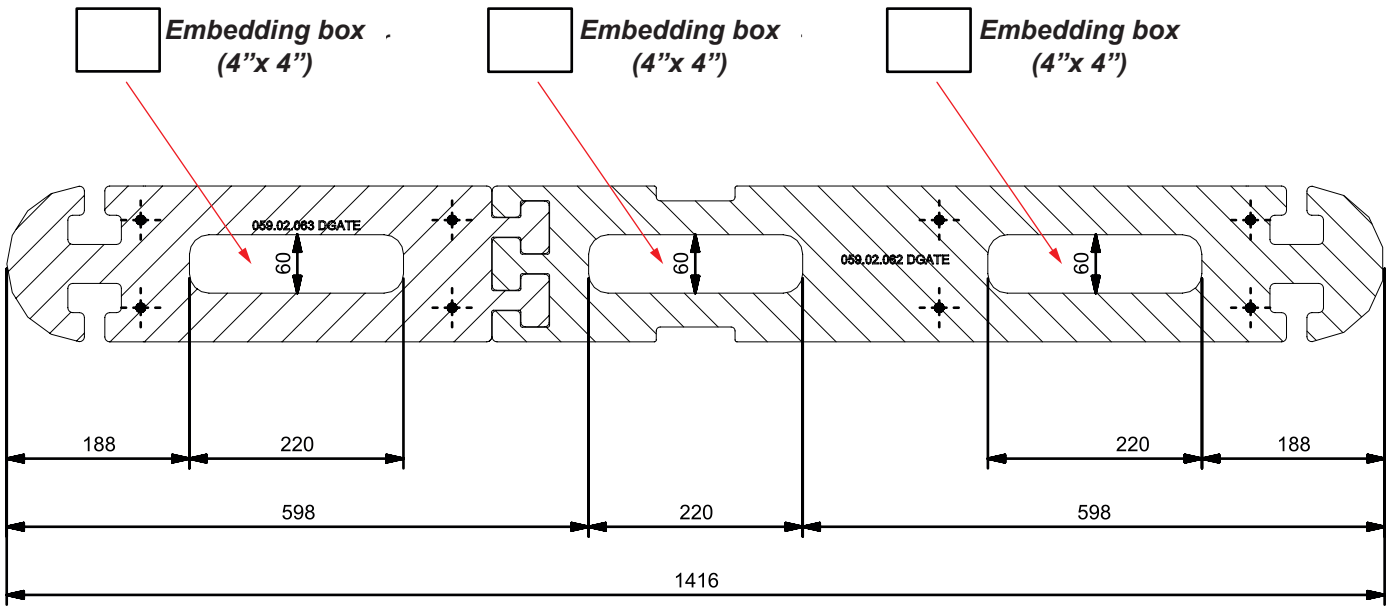

⚠ ***ATTENTION! -*** dGate's measures are illustrated in millimeters.

Fixation points:

The fixation can be made with mechanical anchor bolts, also known as parabolts, or through chemical fixation (preferably, use chemical fixation).

To facilitate the floor drilling, Digicon offers templates according to the equipment model acquired. These templates should be bought separately.

dGate SW and UW drilling template:

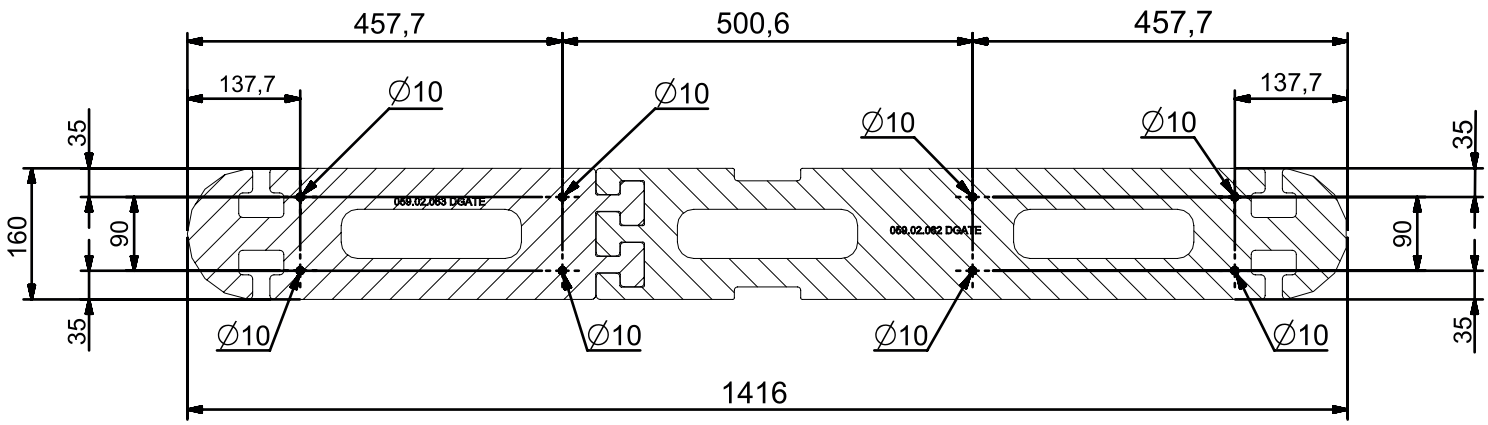

⚠ ***ATTENTION! -*** To tighten the screws, use a tool with a long extension.

⚠ ***ATTENTION! -*** dGate's measures are illustrated in millimeters.

dGate SW 500 single passage template:

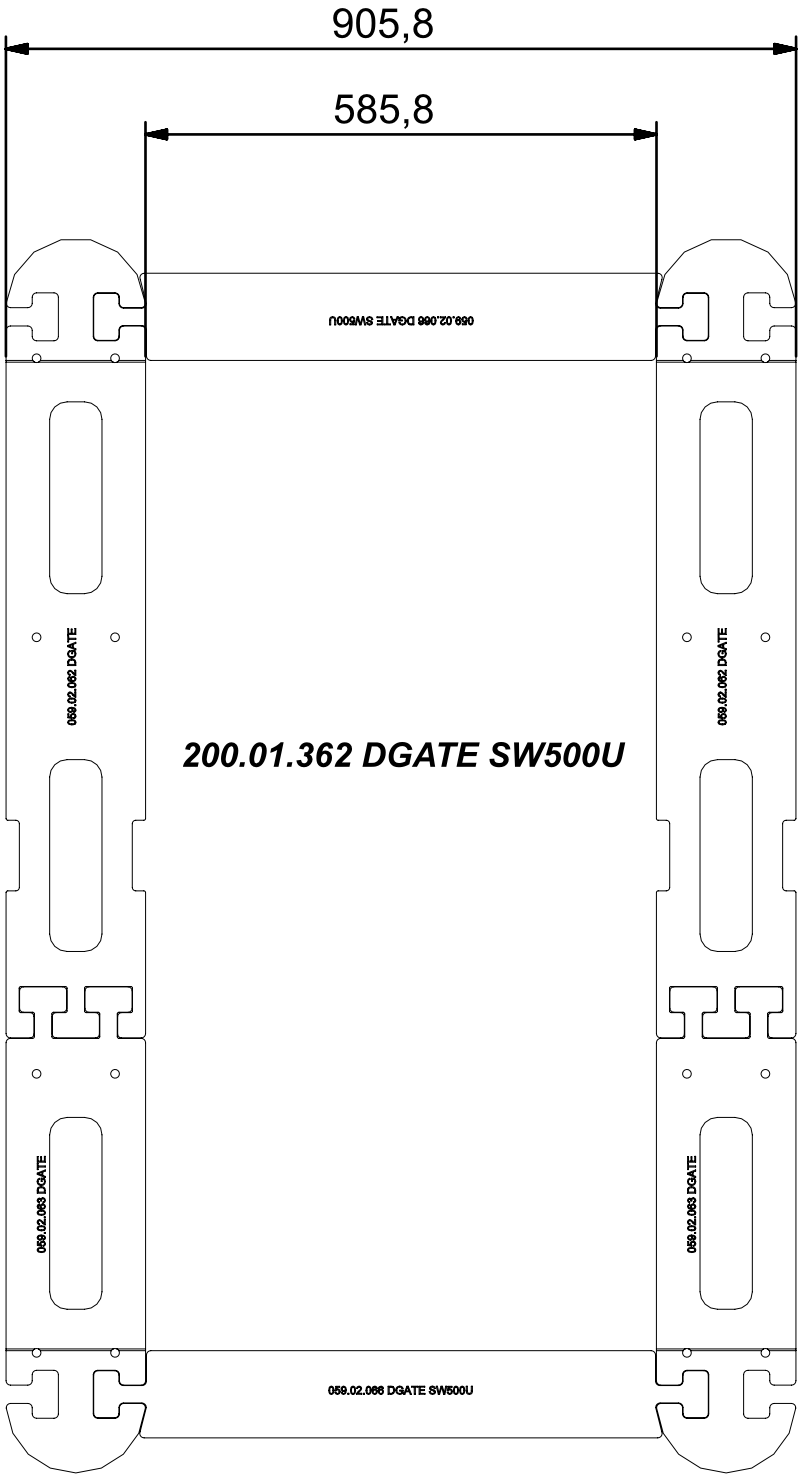

dGate SW 500 double passage template:

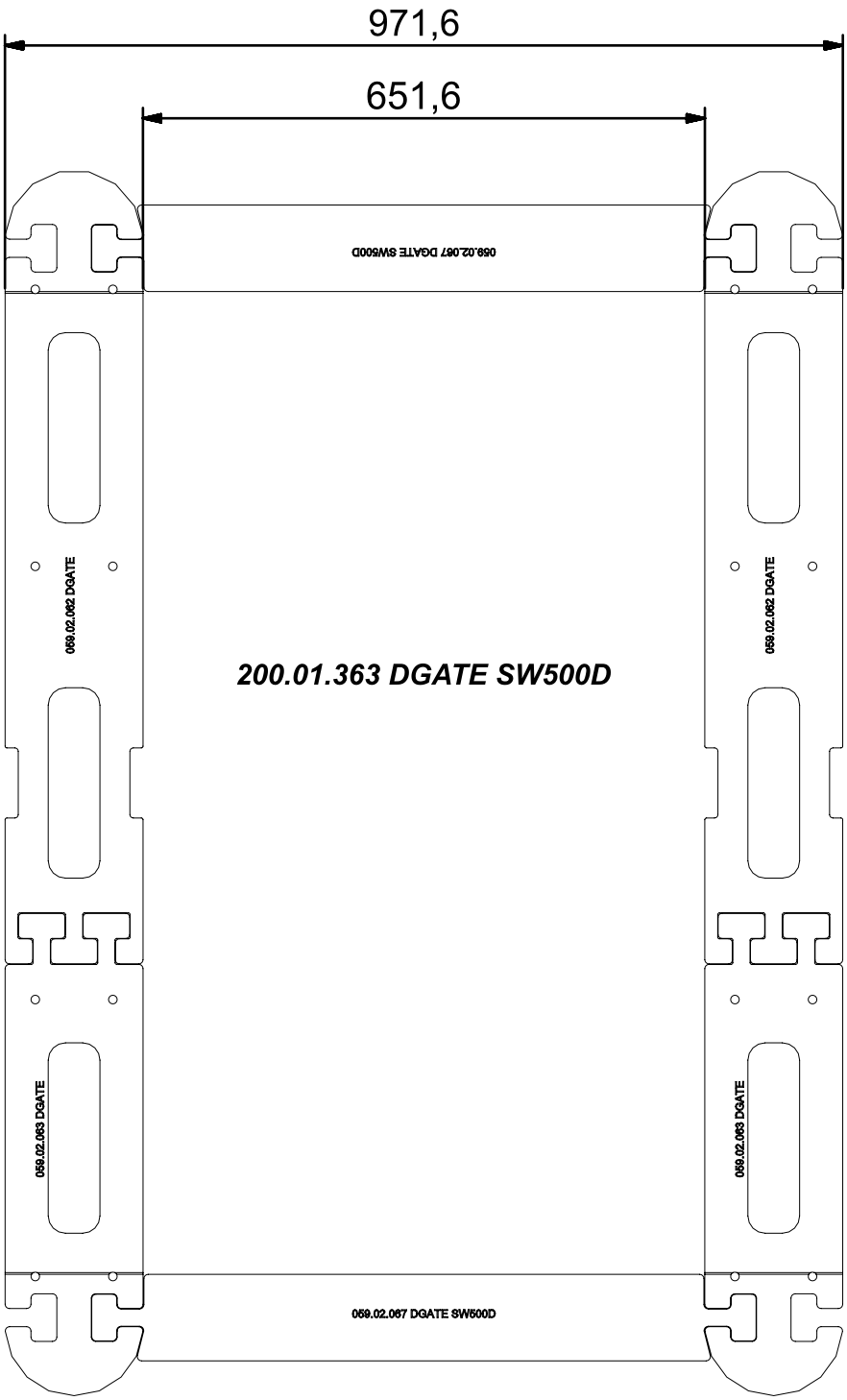

dGate SW and UW 900 template:

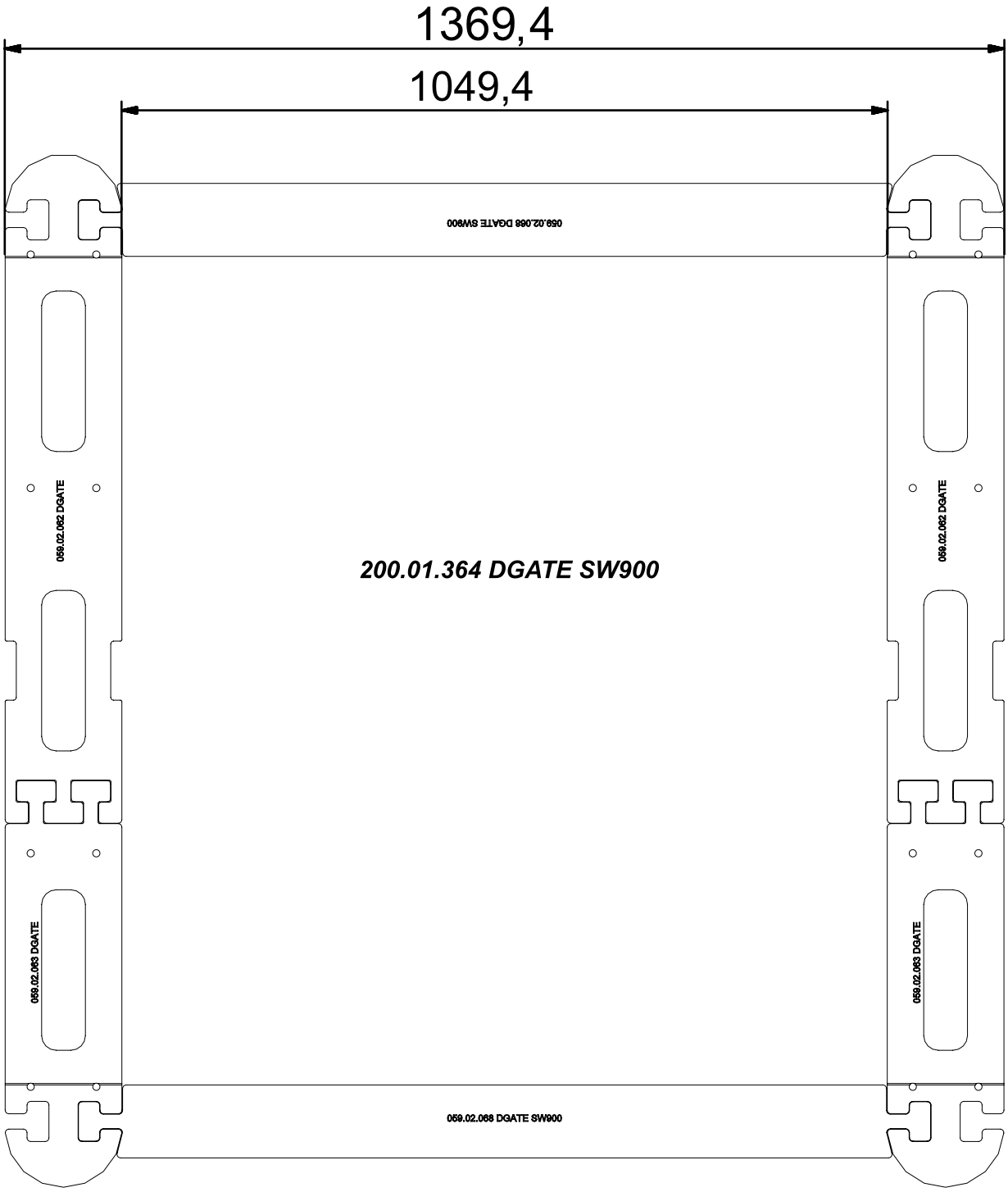

4.3 Access to dGate after fixation

⚠ ***CAREFUL - RISK OF DEATH!***

- Avoid electric shocks! Opening or removing this equipment's doors can expose you to dangerous voltages.
- To decrease the risk of electric shock, before internally accessing the equipment, turn the power off by moving the circuit breaker's switch to OFF. Whenever you need to access the equipment to perform a service, make sure it is performed only by **qualified technical persons.**

Once the dGate is installed and assembled, you can access the internal part of the equipment with the key that comes with it using two methods:

1. By the door that gives you access to the electric panel;

   ⚠ ***ATTENTION! -***You will need to remove the CE protection covers to gain access to the electric panel.

2. By the door that gives you access to the motor or some accessory added later, like the urn kit.

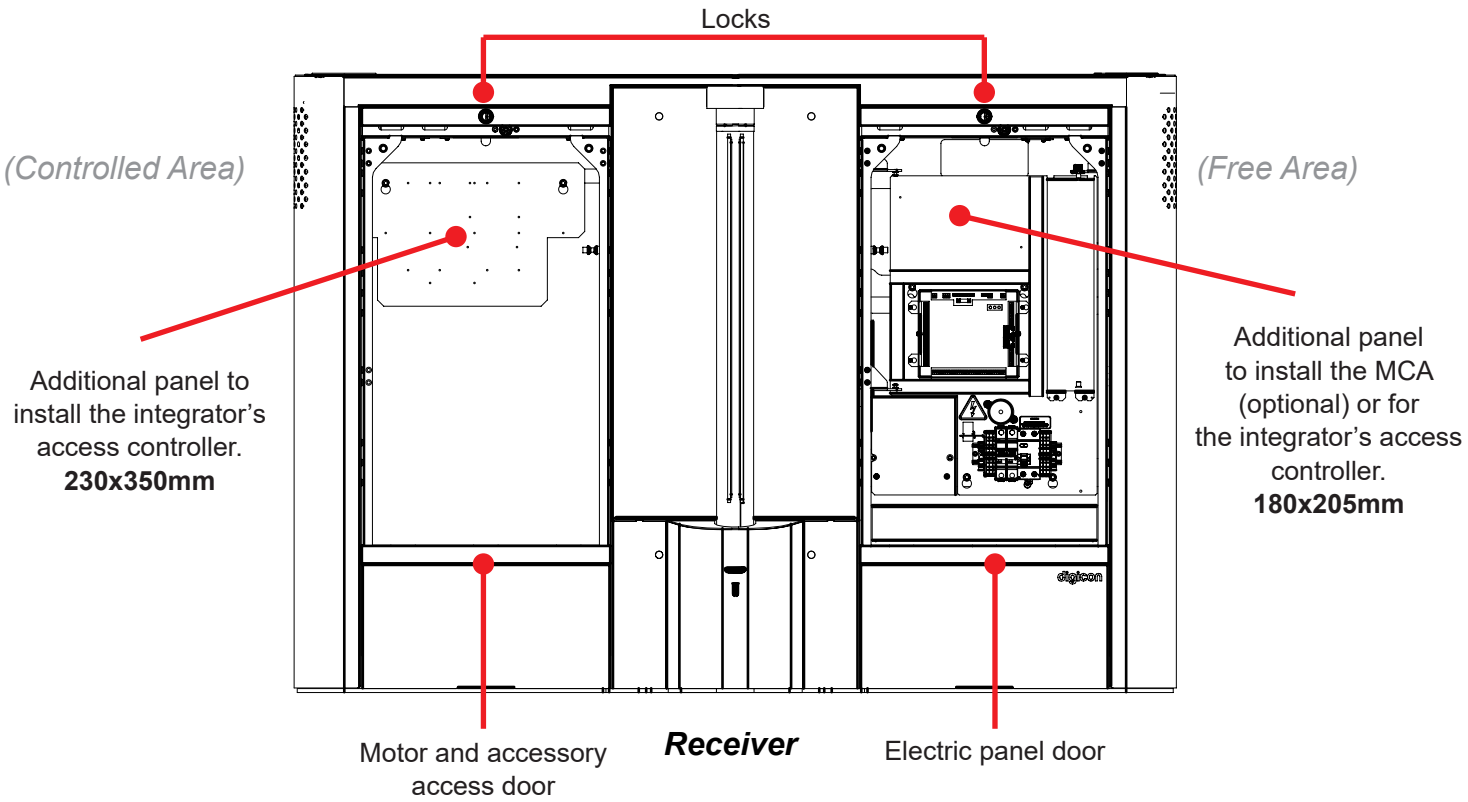

4.4 Electric connection

⚠ ***CAREFUL - RISK OF DEATH! -*** To decrease the risk of electric shock, before internally accessing the equipment, turn the power off by moving the circuit breaker's switch to OFF. Whenever you need to access the equipment to perform a service, make sure it is performed only by **qualified technical persons.**

4.4.1 Electric panel

The MCP (Passageway Control Module) and the interconnection board are installed in the electric panel. If the integrator needs more physical space, dGate has another area designed for it. It also has the connections to the passage sensor and to the electric grid. The Electric Panel will always be in dGate's Receiver lock.

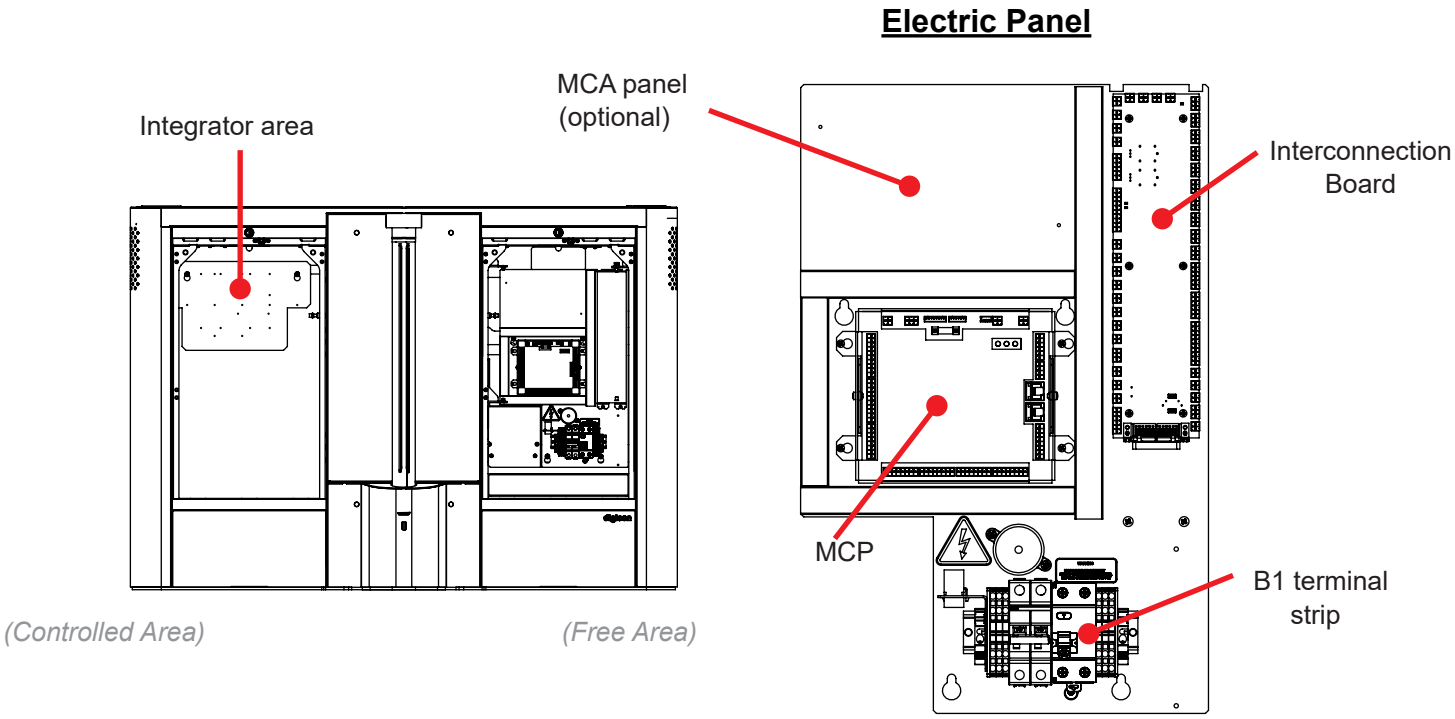

⚠ ***CAREFUL - RISK OF DEATH! -*** Risk of electric shock on the panel.

dGate's interconnection board is on the other side of the passage, on dGate's Transmitter.

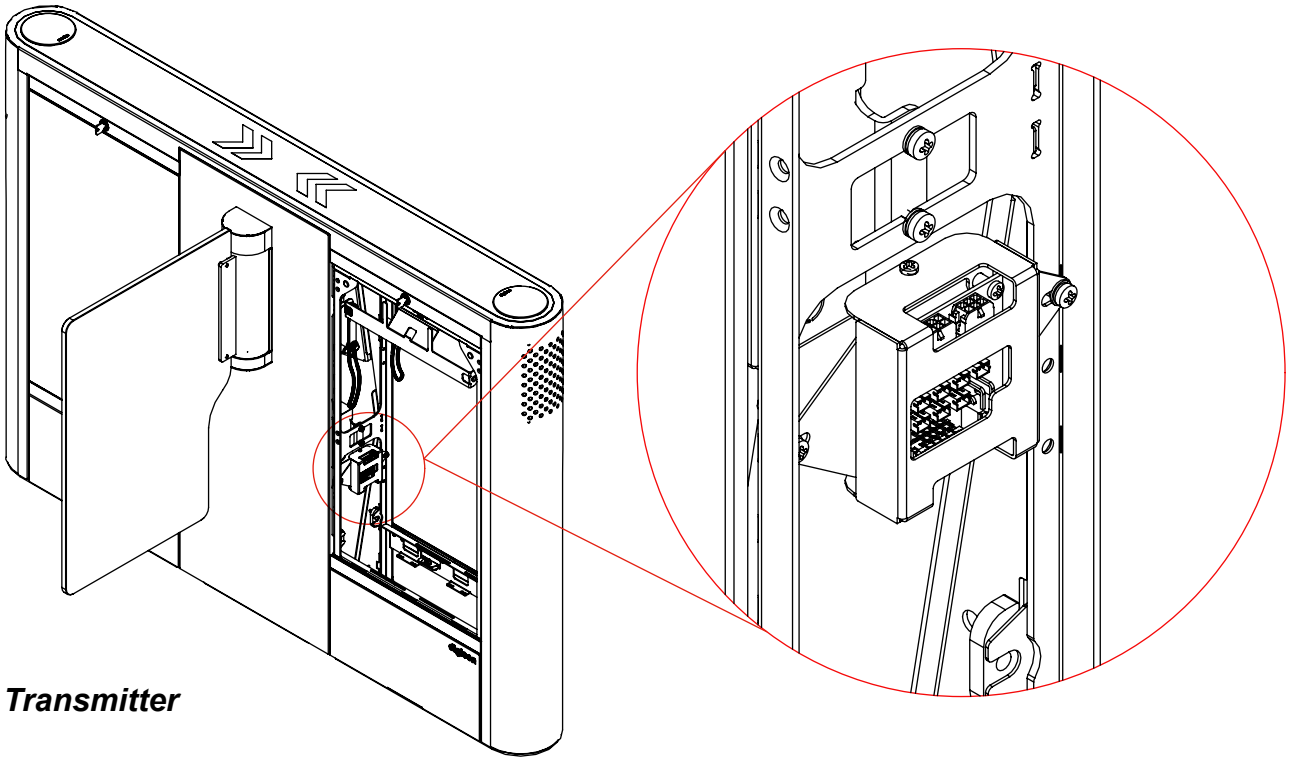

Transmitter

5. Interconnections

⚠ ***ATTENTION! -*** Only **qualified technical persons** are equipped to install this equipment. The installation should observe all local standards and regulations.

To assemble a passage, you will always need two modules. The proper interconnection of these two modules is essential if you wish the equipment to work properly.

The equipment is interconnected through power cables, and data and control cables.

It is important that these cables are passed through separated conduits to ensure the equipment's proper functioning.

3 - pass layout example:

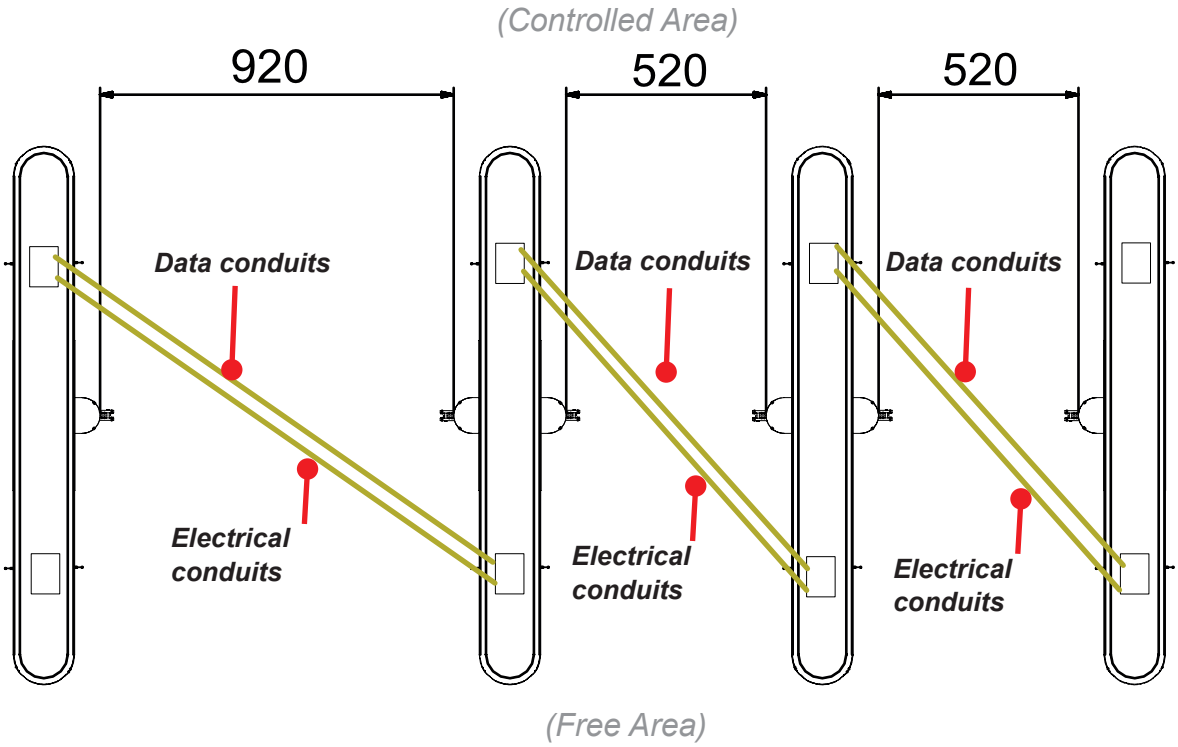

The cable conduits should be flexible with 2" (50 mm) in diameter.

⚠ ***ATTENTION! -*** Digicon only suggests this infrastructure. There should be a distance of at least ten centimeters (10 cm) between the electrical conduits and the data conduits.

⚠ ***ATTENTION! - dGate's measures are illustrated in millimeters.***

5.1 Basic wiring

Data conduits:

037.13.383 - INTERCONNECTION CABLE RS485 + UPPER PIC. - DGATE DM (5 m);

Electrical conduits:

037.13.382 - AC INTERCONNECTION CABLE - DGATE DM

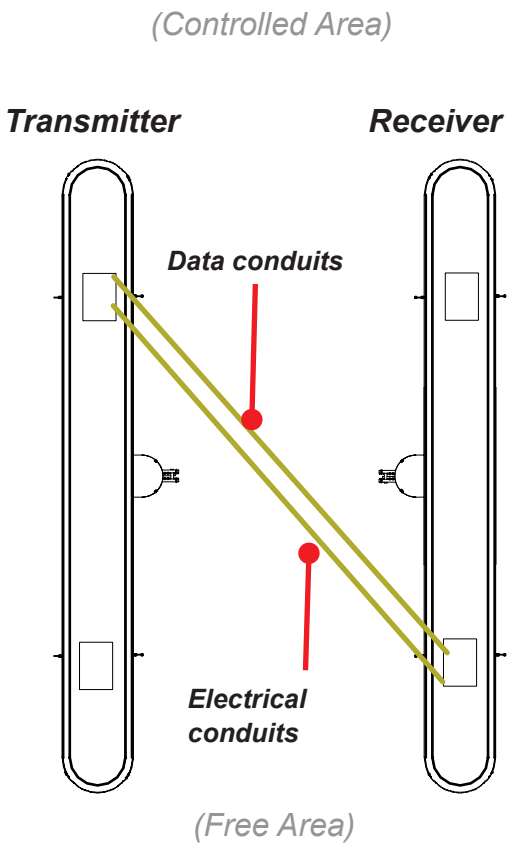

ATTENTION! -

- Digicon offers 5-meter-long interconnection cables.
- The depth of the conduits should be dimensioned to give enough room to the
- cables.
- If you need longer cables, get in touch with Digicon.

a) Interconnections between gates (037.13.383):

⚠ ***CAREFUL - RISK OF DEATH! -*** To decrease the risk of electric shock, turn the equipment's power off by moving the circuit breaker's switch to OFF. Make sure that all maintenance services are performed by qualified technical persons.

1. On the Receiver dGate, connect the power cable to the interconnection board, on the CN12 and CN8 connectors, according to the identification tags;
2. On the Transmitter dGate, connect the signal cable to the interconnection board's CN10 connector.

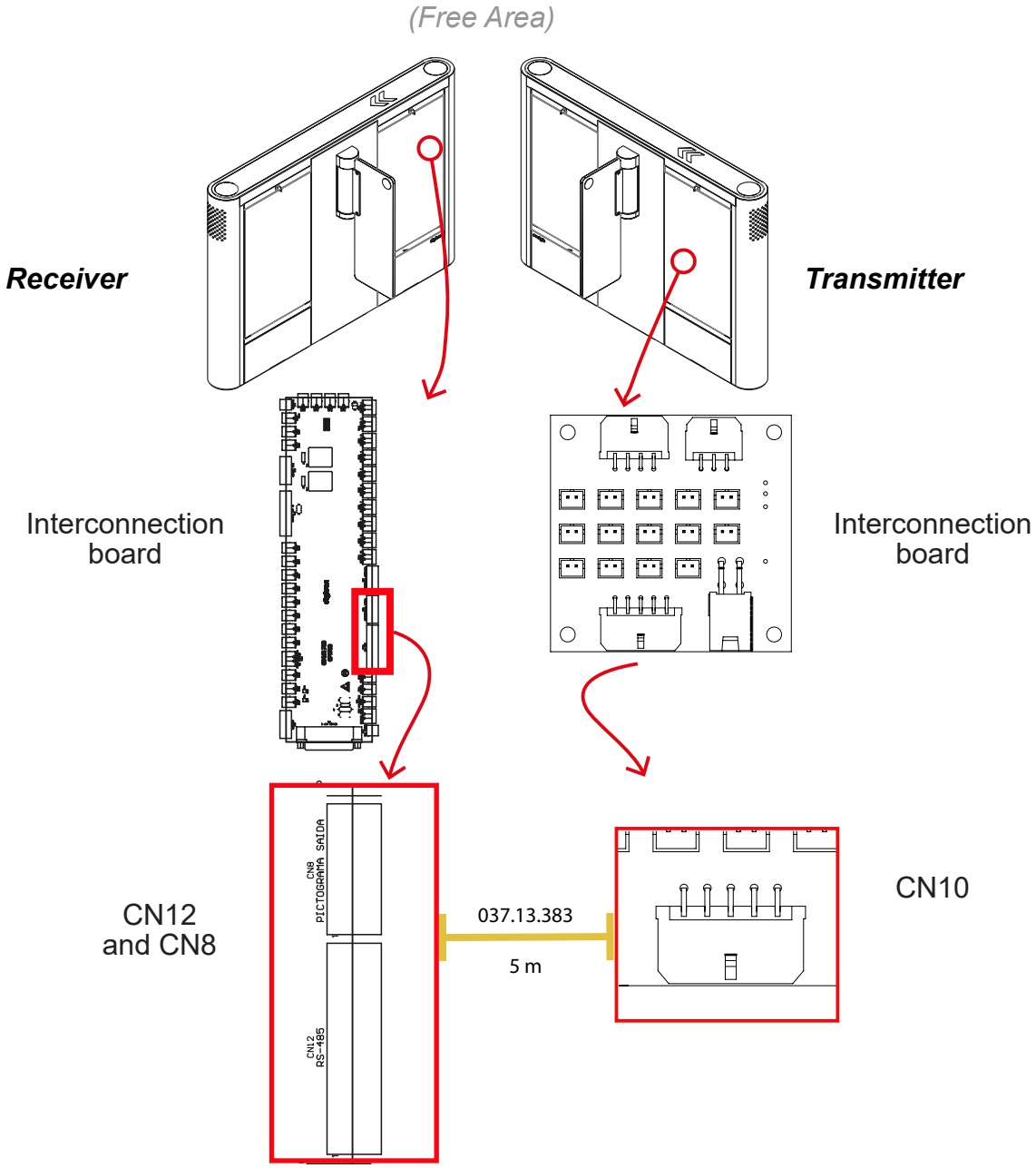

b) AC power supply interconnection cable (037.13.382):

⚠ ***CAREFUL - RISK OF DEATH! -*** To decrease the risk of electric shock, turn the equipment's power off by moving the circuit breaker's switch to OFF. Make sure that all maintenance services are performed by qualified technical persons.

1. On the Receiver dGate, connect the power cable to BN1, on the F-N-T terminals, according to the identification tags
2. On the Transmitter dGate, the cable is connected by default to the power supply, on the F-N-T terminals, according to the identification tags.

(Free Area)

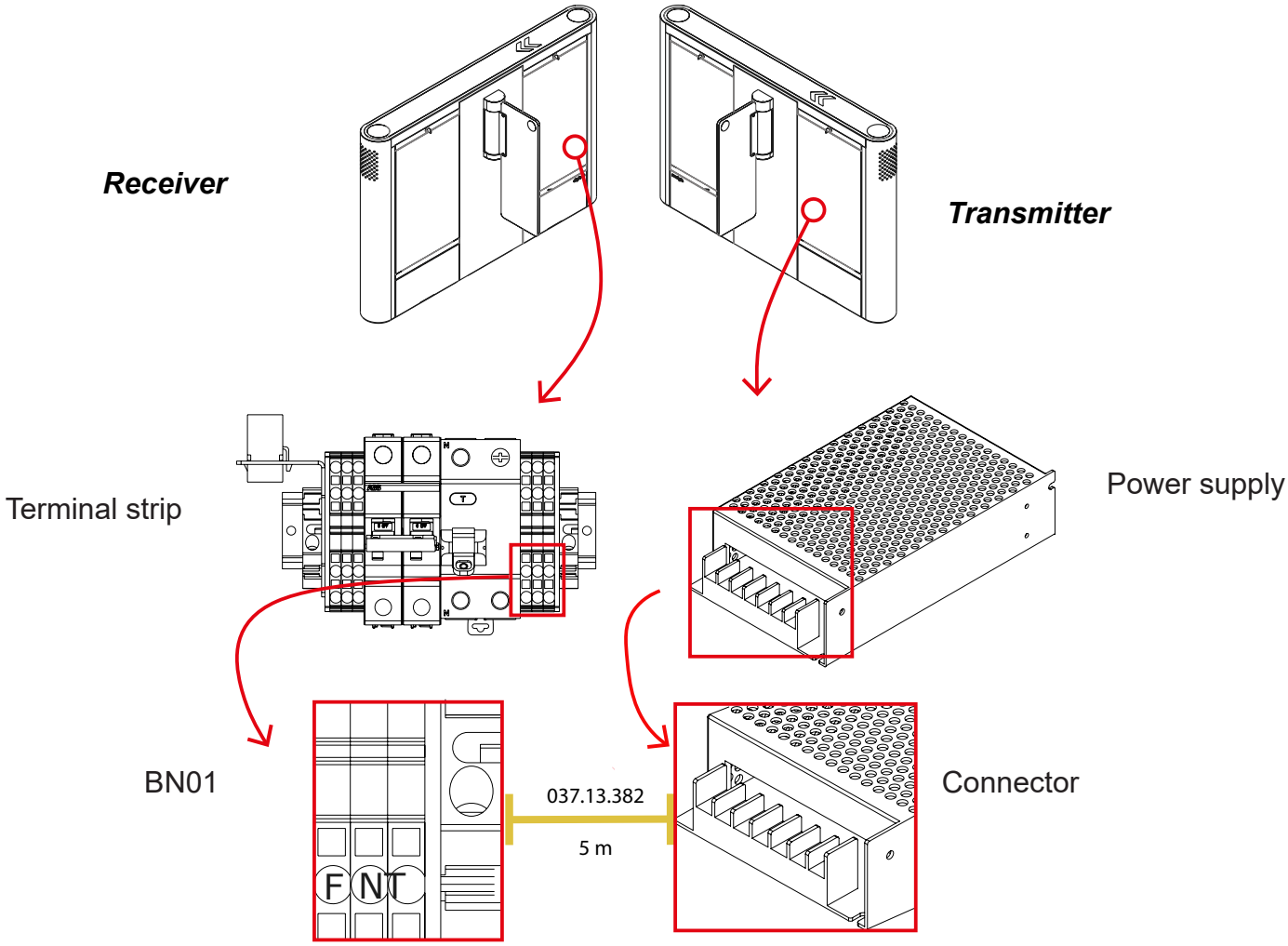

⚠ ***ATTENTION! -*** The 037.13.382 cable is connected to the power supply by default. Just connect it to the receiving gate

5.2 Connection to the electric network

dGate is powered with voltages ranging from 100 to 240 Vca. The NBR 5410 standard should be used as reference for the equipment electric installations.

dGate has an electric panel with a terminal strip to where the power cables (phase and neutral) and the ground should be connected.

⚠ ***CAREFUL - RISK OF DEATH! -*** - To decrease the risk of electric shock, before maintenance, turn the power of where the equipment will be installed off and make sure the electric network's conductors are powered off. Make sure that all maintenance services are performed by **qualified technical persons.**

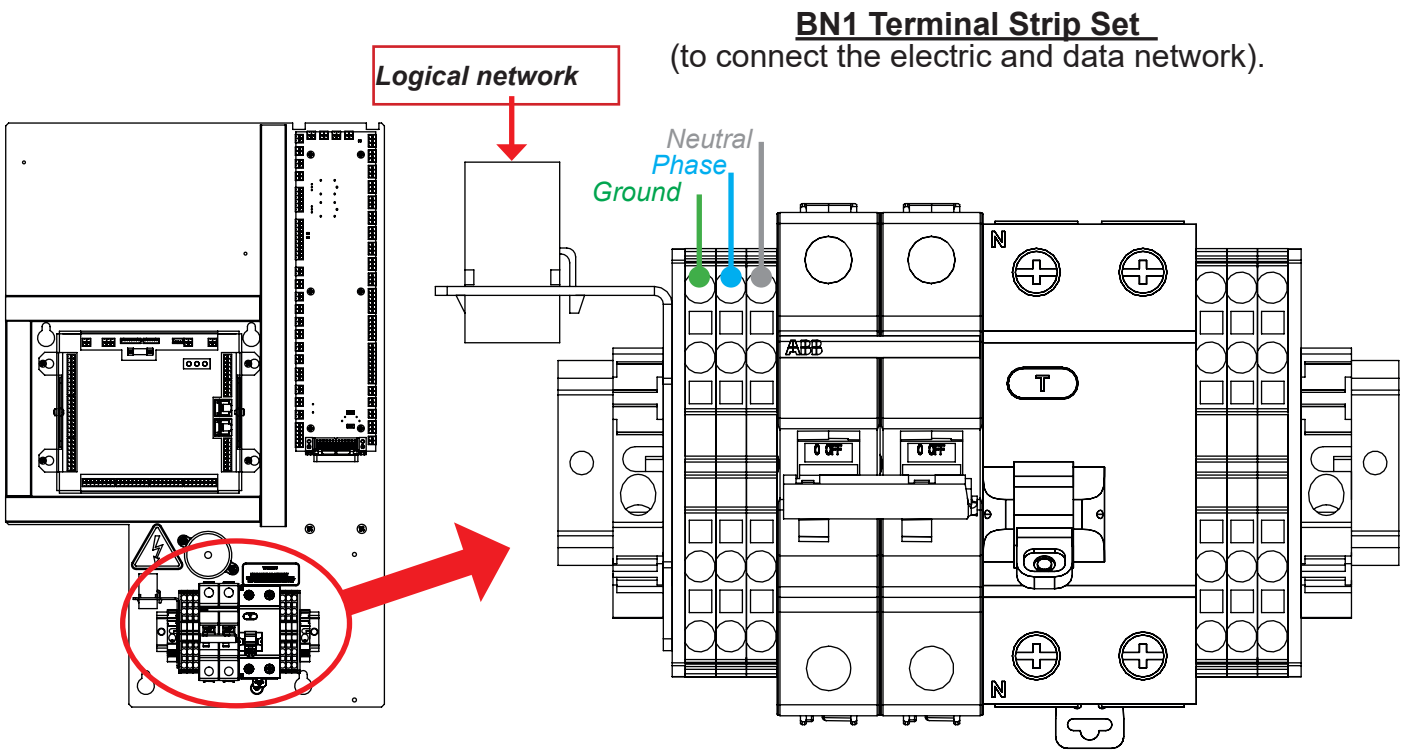

⚠ ***ATTENTION! -*** Preferably, the AC and ground cables should be of good quality and have the proper size to reach the distribution board. The data cable should be of the CAT5E type or better.

5.3 Connection of the control signals

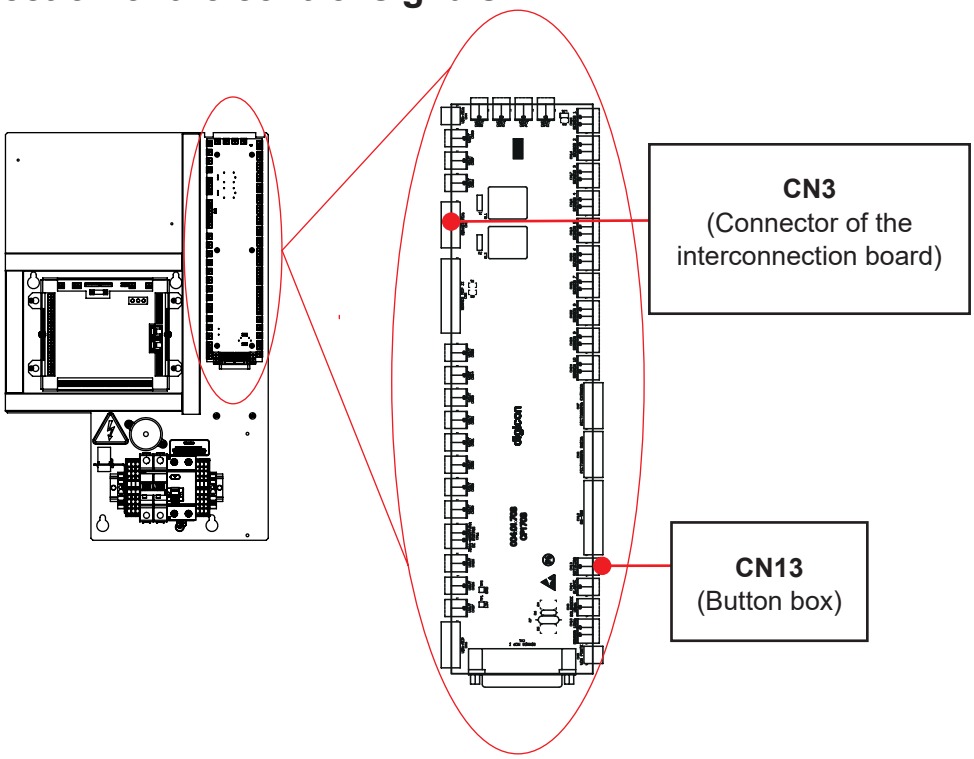

Dry contact passage authorization:

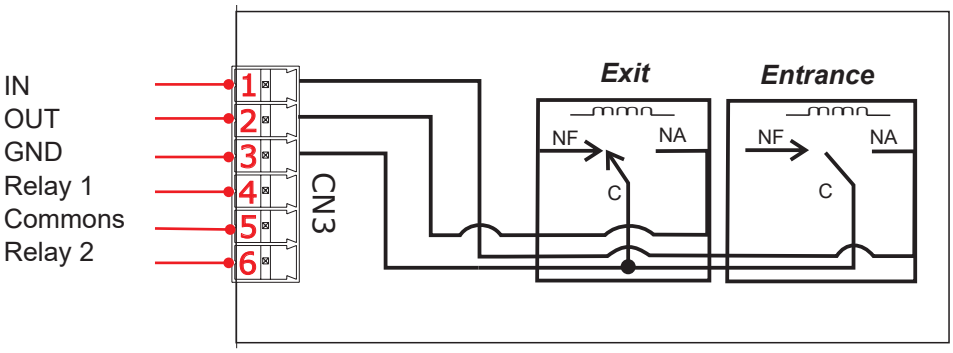

dGate has the feature of allowing entering or exiting passages by dry contact. The entrance is allowed by the contact of the IN pin (pin 1 of the CN 3 connector) with the GND pin (pin 3 of the CN 3 connector). In turn, the exit is allowed by the contact of the OUT pin (pin 2 of the CN 3 connector) with the GND pin.

The passage authorization electric diagram is presented on the picture above, where the contacts are made by two external relays of the dGate.

Dry contact passage confirmation:

dGate also has a dry contact passage combination to inform another system integrated to the gate when the user is done passing through. When the entering process is completed, Relay 1 connects the CN3 connector's Relay 1 and Commons terminals (pins 4 and 5, respectively). Likewise, when the exiting process is completed, dGate informs the integrated system of it by connecting the CN3 connector's Commons and Relay 2 terminals (pins 5 and 6, respectively). By default, the Relay 1 and 2 terminals regular status is NA (usually open) as to Commons pin. However, each terminal can be separately configured to operate in the NA or NF (usually closed) mode as to the Commons terminal by respectively positioning the J1 and J2 jumpers, located next to the CN3 connector.

The CN3 connector's electrical connection is exhibited in the picture below.

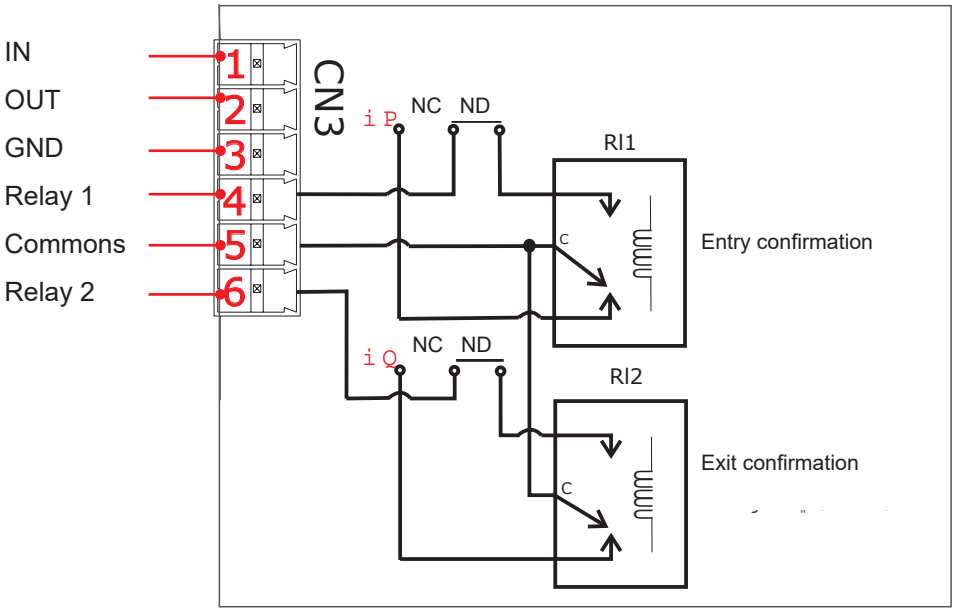

Emergency activation:

Through the CN13 connector, it is possible to integrate a contact for emergency situations. When you connect its terminals (pins 1 and 2), dGate opens its doors in the exit direction, authorizing the passage in both ways as long the CN13 connector's pins remain in contact. The picture below illustrates an emergency contact connection; in this example, the contact is made by a relay outside dGate.

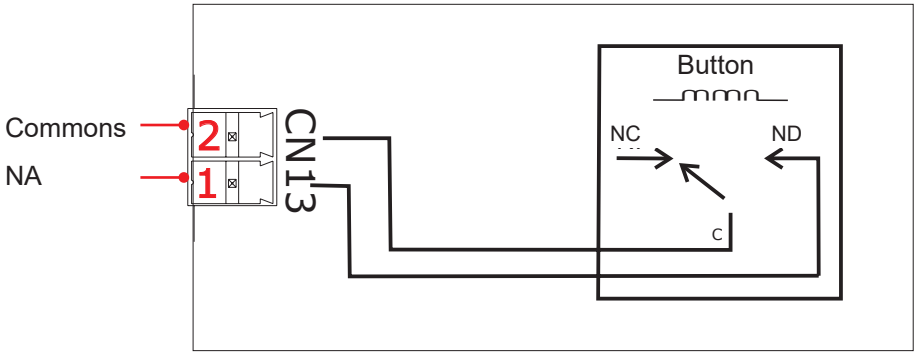

6. Identification of the Internal Parts and Functionalities

6.1 MCP control board

The MCP control board has the functionality of controlling the user's passage, the pictogram indications, the sensor reading, and the whole processing of the system's logic, according to the signals received by an access control system. The MCP controller can be accessed by the internal side hatch, on the entrance side of R gate.

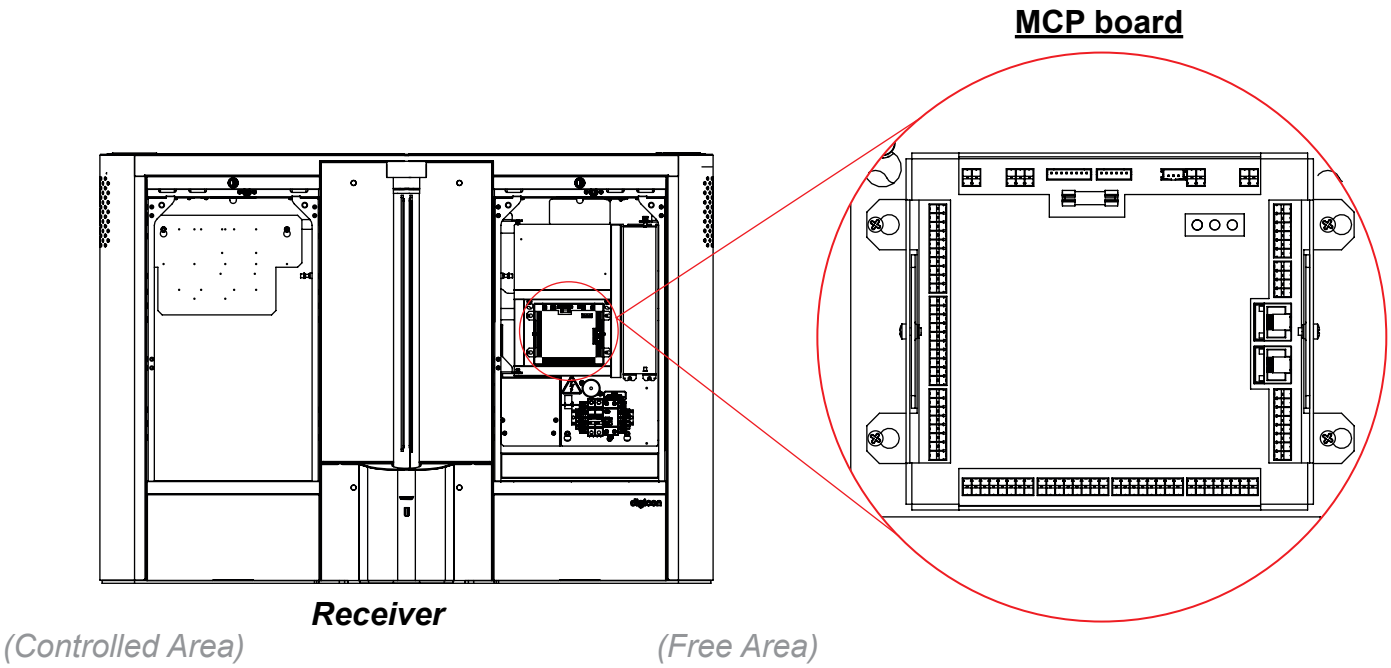

6.2 Pictograms

dGate has four pictograms of different types and locations: two front orientation pictograms (entrance and exit) and two upper operation pictograms (entrance and exit). The operation of both pictogram types is described below.

⚠ ***ATTENTION! -*** dGate's pictograms are identical for both modules. The modules also have motors responsible for the doors' motion.

Operation pictogram (upper):

The operation pictograms are installed on the upper part of the equipment and are located at the right side of the user that approaches the gate, both in the entrance and exit directions. They can display the colors green (access allowed) or red (access denied), directing the equipment's passage flow. A flashing red pictogram on either side means that the passage was not allowed.

A flowing green pictogram in the passage direction means that the access was allowed.

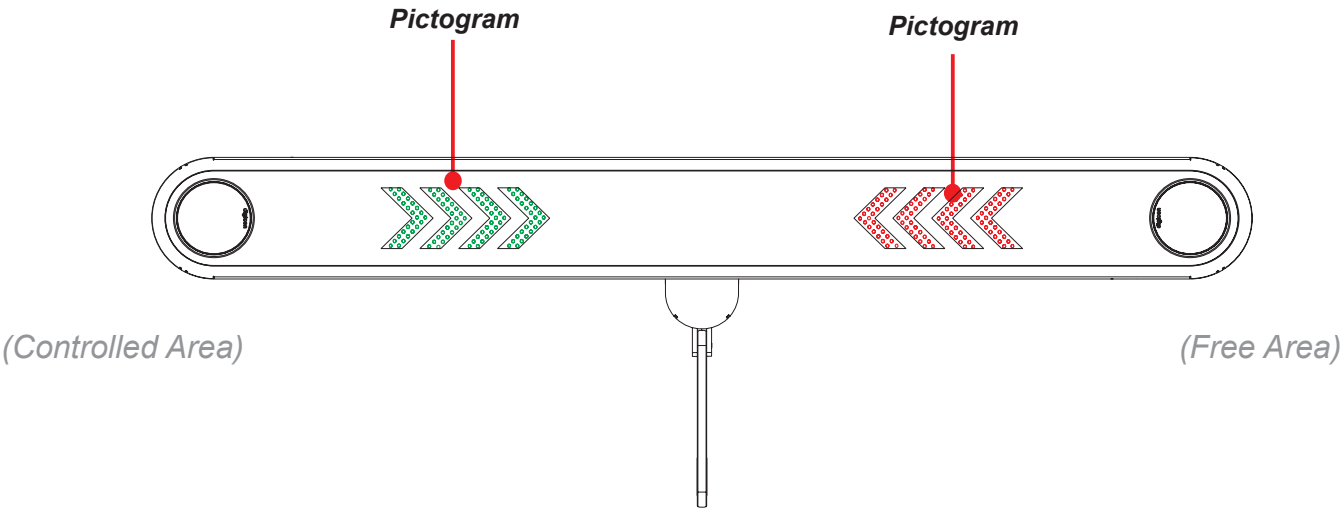

Orientation pictogram (frontal):

The orientation pictogram is installed on the equipment's ends and is represented by a green arrow or a red X.

The red pictogram tells the user that the dGate is not working in that direction or that his/her passage is not currently allowed.

The green pictogram tells the user in which direction the dGate is working.

O pictograma verde informa ao usuário o sentido que o bloqueio dGate está operando.

- Enabled or disabled direction. For example, the gate can be configured in only one passage direction (only entrance).

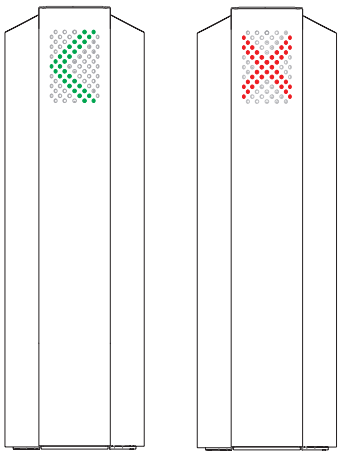

- Direction allowed or denied. For example, when a user enables the passage on the opposite direction, the flow is denied.

6.3 Sensor barriers

Are designed to detect the passage direction, protect the users, and detect illegal passages.

dGate employs infrared (IR) sensors to control the user's passage by the lane.

dGate has the total of ten IR sensors, creating barriers that inform the MCP module about the user's location in the passage lane.

In the central part, there are sensors responsible for the safety system (anti-crush).

With these sensors, the MCP module manages the configuration of dGate's several operation modes, allowing the control of the passage direction (bidirectional operation), the control of the desired safety level (prioritizing asset safety or user safety), and the operation mode (free, controlled, locked).

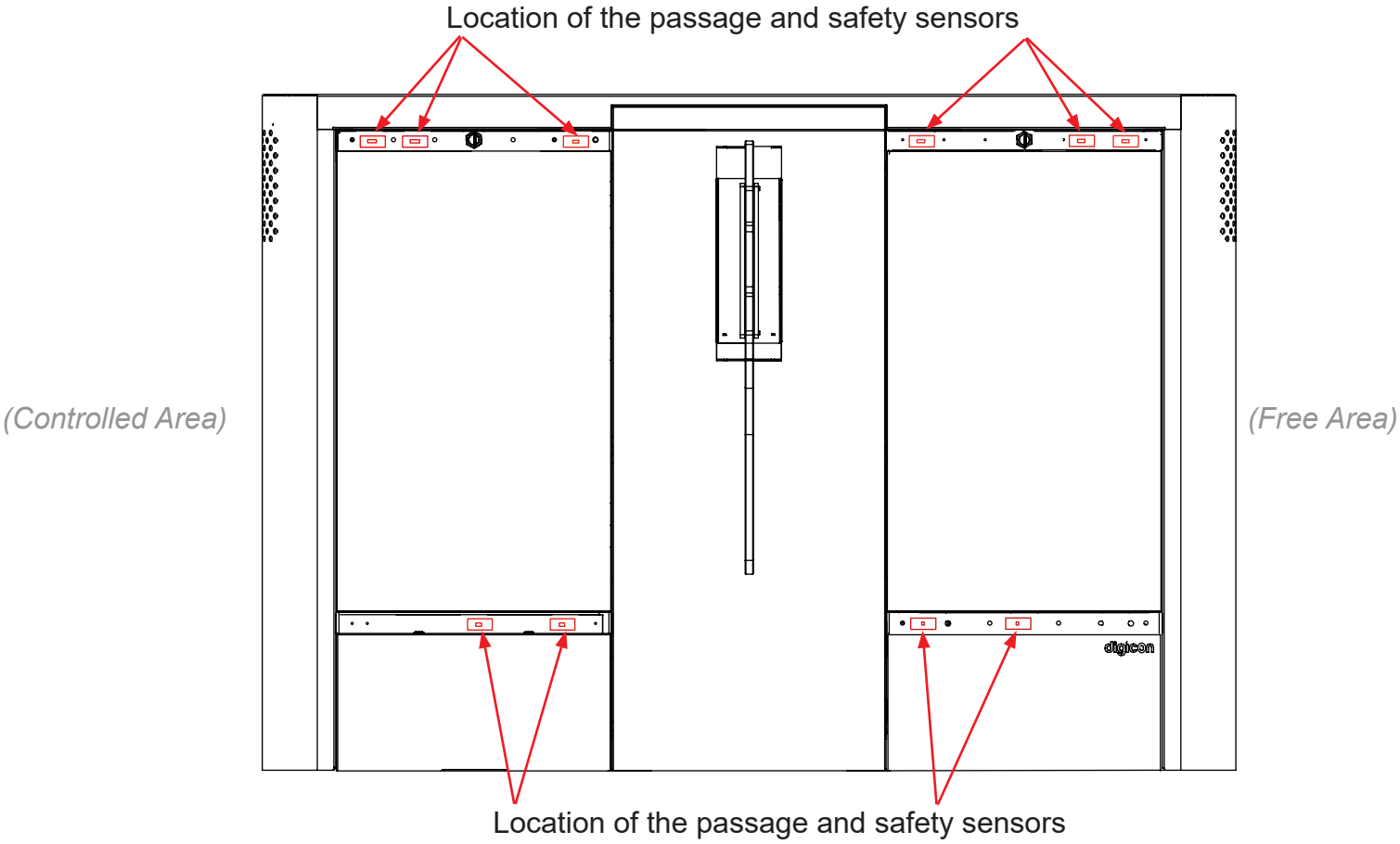

6.4 Antipanic

For emergency situations, you can use the implementation through the activation of the emergency contacts, as described in item 5.2, through which dGate opens the doors in the exit direction, allowing the passage in both ways as long the contacts are activated.

Another situation execution is performed by turning dGate off. It will enter in the standby status, with the doors closed, but unlocked. The user can simply push the doors to pass through.

dGate UW:

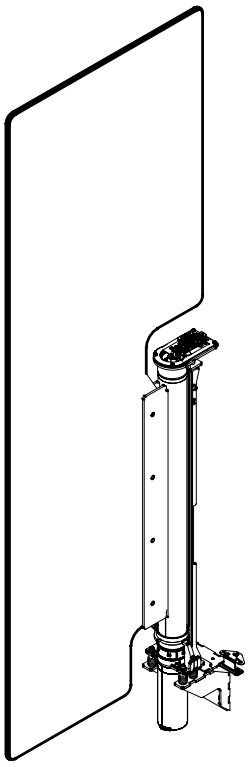

dGate SW:

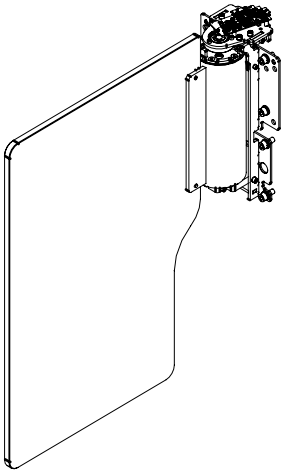

6.5 Functionalities

dGate has several functionalities to customize you operation. These functionalities are configurable via software by a qualified technical person and are detailed below.

- Selectable independent passage control modes, for entrance or exit passages;
- Independent door speed configuration, for opening and closing;
- Access control configuration with open doors;
- Anti-crush protection system;
- Passage timeout;
- Passage direction detection;
- User return detection;
- Idle user detection;
- Gate trespassing detection;
- “Tailgating” user detection;
- Asset safety mode;
- Passage authorization accumulation.

6.5.1. Anti-crush protection system

The dGate system can be configured to control entrance or exit passages in different modes for each independent passage direction.

Each passage direction can be configured to operate in three different statuses: Free, Locked, and Controlled. When operating in the free passage status, all and every passage in that direction is allowed, regardless of if the user is authorized for passage or not. In the locked passage mode, you have the opposite situation, when every attempt of passage will be blocked, regardless of if the user is authorized for passage or not. If the passage direction is operating in the controlled mode, the passage is allowed only for duly authorized users.

With the different configuration possibilities for each passage direction, dGate can be configured to operate in the following modes:

Operation mode	Passage in the entrance direction	Passage in the exit direction
Mode 1	Locked	Locked
Mode 2	Controlled	Locked
Mode 3	Locked	Controlled
Mode 4	Controlled	Controlled
Mode 5	Free	Locked
Mode 6	Locked	Free
Mode 7	Controlled	Free
Mode 8	Free	Controlled
Mode 9	Free	Free

Factory preset:

Operation mode = Mode 4 (Controlled Entrance/Controlled Exit).

6.5.2 Door speed configuration

dGate allows you to select the doors' motion speed in five different levels, as level 1 refers to a slow motion and level 5 to a quick motion.

The doors' speed can be individually configured for each motion, allowing you to select different speeds to open and close them. dGate will always open the doors towards the authorized passage direction, that is, the entrance door will open towards the exit when an entrance passage is authorized and the exit door will open towards the entrance when an exit passage is authorized. The speed configurations selected for opening and closing will be the same to authorize passages both to enter and exit.

Factory preset:

- Opening Speed = Level 3
- Closing Speed = Level 3

6.5.3 Access control configuration with open doors

For a more user-friendly and receptive control, dGate allows you to configure the standby status with open doors. In the standby status, the access control logic is reversed, blocking unauthorized users.

Once a user is authorized to pass, dGate's doors remain open, regardless of the user's passage direction, allowing the entrance or exit from/to the controlled environment. On the other hand, when an unauthorized user is detected in any direction, dGate closes the doors and blocks the passage between the environments.

Factory preset:

- Access control with open doors = Disabled.

6.5.4 Anti-crush protection system

The anti-crush protection functionality's goal is to increase the safety of dGate's users. When this functionality is enabled, the system does not open or close the doors if the sensors present in the regions to which the doors would move identify an obstruction by users or objects.

If the obstruction happens before the system begins to move the doors, it will be postponed until the user or object clears the motion route. If the doors already started to move before the moment of obstruction, the system will hold the doors' motion and return them to their previous position, postponing the motion until it is authorized.

The region monitored by the anti-crush system initially includes the sensors that are closer to the doors' motion axle (Zone C), but it can be configured to also include the sensors of the medium regions of the entrance and exit routes (Zone B).

Once enabled, the system's anti-crush protection will act during every motor motion, both for opening and closing, and for entering and exiting passage authorizations.

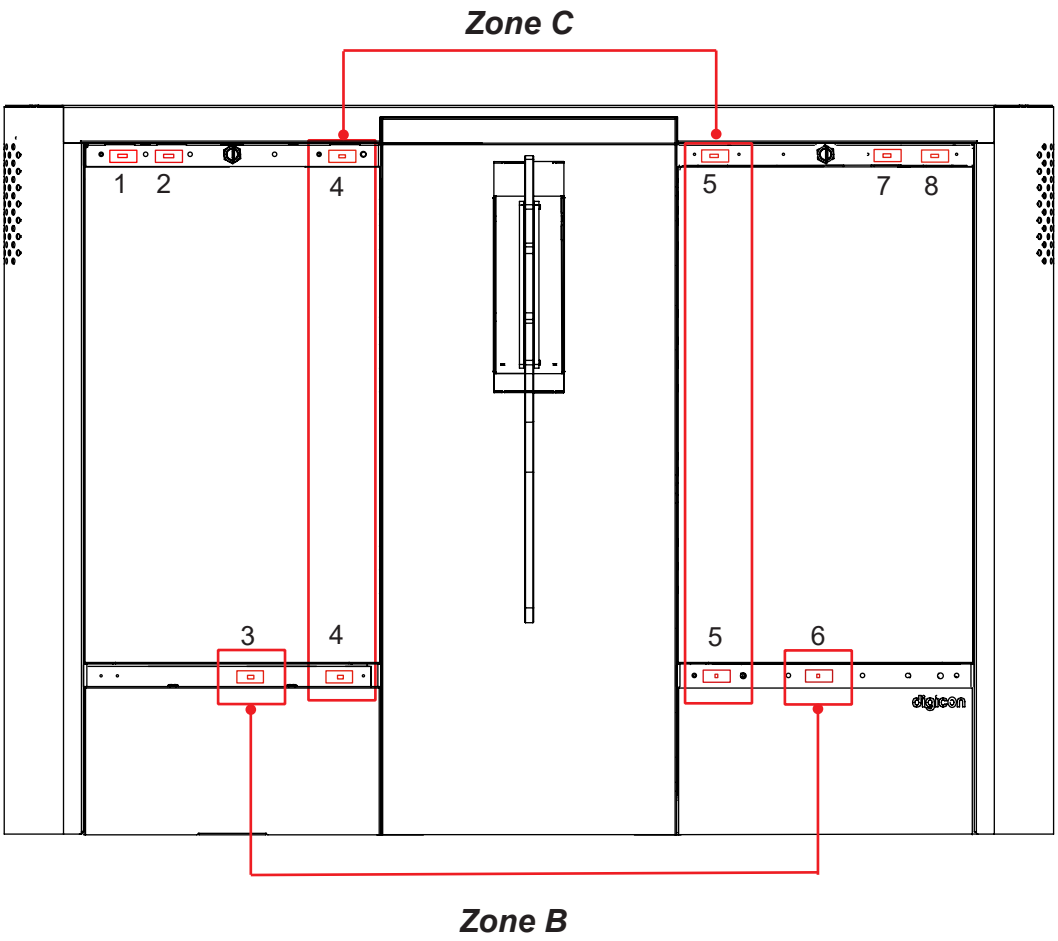

6.5.5 Passage timeout

The passage timeout is the maximum period for which dGate will hold the passage open to an authorized user cleared. This period can be configured in 100-ms fractions. If the passage timeout is not configured, dGate will remain indefinitely open, waiting for someone to pass in the authorized directions.

After the passage timeout, the dGate system will cancel the passage authorization and close the doors (if the anti-crush feature does not prevent it).

The timeout can also be configured to restart its countdown when the system detects the entrance of a user in the authorized direction or on the opposite direction, even if the user does not complete the passage. The timeout period restart can be individually enabled for each one of the cases above.

When there are only three seconds left to the system reach the timeout set value, dGate will inform it to the users during this period through an intermittent sound notification (beep), a red-and-green flashing notification on the upper pictogram of the authorized direction and a flashing red light on the upper pictogram on the opposite direction.

Factory preset:

- Passage timeout = Enabled.
- Timeout Period = 7s.
- Countdown restart by detection of user = Enabled.
- Countdown restart by detection of user in the opposite direction = Enabled.

6.5.6 Passage direction detection

dGate has a passage direction detection feature, that is, the system identifies the user's motion direction by its sensors' reading during the user's passage.

With the motion direction detection, it is possible to configure dGate to allow passages in the opposite direction when, for example, authorizing an entrance would allow both an entrance and an exit passage. A practical application of this functionality would be allowing a user that already is in the controlled environment to authorize, on the exit terminal, the entrance of another user located outside the environment.

If the passage permission in the opposite direction is disabled, when someone is identified trespassing the gate on the direction opposite to the one authorized, dGate closes its doors, preventing the conclusion of the motion in the opposite direction. The doors will shut at the closing speed previously configured.

The feature of non-authorization of passages in the opposite direction is executed moments after the passage authorization. To prevent the authorization of passage during the identification of a breach in the opposite direction, see the section - Gate trespassing detection.

Factory preset:

- Allow passage on the opposite direction = Enabled.

6.5.7 User return detection

With the user passage direction detection, it also possible to configure in dGate the user return authorization functionality. With this feature on, the gate will allow a user that already went through the blocking zone to return to his/her motion origin point. With this function disabled, the equipment will close the doors when the return is detected (if the anti-crush functionality does not prevent it).

Factory preset:

- Allow user return = Enabled.
-

6.5.8 Idle user detection

The constant scanning of the sensor to monitor the user's motion allied to the time he/she occupies in each region of the equipment passage allows the idle user detection feature and what dGate should do in those cases. The idle user situation is identified when, once through, the user remains in the internal region of the gate, without moving forward or backward for a given period. The maximum time a user is allowed to remain in the same region without being classified as an idle user is adjustable.

Once the user is detected, the dGate system allow you to enable a function to softly close the doors and/or sound a notification.

When an idle user is identified, the doors are softly closed to safeguard the equipment and the user. In this functionality, there is not the possibility to configure how fast the doors close because they are always closed slowly. This functionality is not executed when the anti-crush function is activated and the user is still in the established protection zone.

The sound notification that goes off when an idle user is detected on the equipment is a standard feature, but it can be disabled via configuration. This notification is composed of intermittent beeping.

Factory preset:

- Time to classify as an idle user = 5s.
- Close doors when an idle user is detected = Disabled.
- Sound an alarm when an idle user is detected = Enabled.

6.5.9 Gate trespassing detection

A gate trespassing happens when a user enters the internal area of the gate's sensors but his/her passage was not authorized. dGate allows you to configure what it should do when a gate trespassing is detected.

When the gate trespassing is not allowed, dGate sounds intermittent alarms with red light notifications on the pictograms as soon as the trespassing user enters the sensors' monitoring area.

Another available configuration is not to allow passages when the doors of either direction is being trespassed, both on the regular passage direction or opposite to the authorized direction. When it is working with this functionality, dGate will only authorize the passage of the user if no sensor is detecting an obstruction in the interior part of the equipment when the user presents a passage credit. The functionality of non-authorization of passage when a door trespassing is identified refers only to trespassing during the attempt of credit validation. In these cases, the passage credits are not deducted until the user is cleared to pass.

Factory preset:

- Allow gate trespassing = Enabled.
- Do not allow authorization when trespassing is identified = Disabled.

6.5.10 "Tailgating" user detection

A "tailgating" user is classified as a second, unauthorized user that tries to cross the gates immediately behind an authorized user. dGate has a "tailgating" user detection system. This functionality allows you to configure the blockage of a fraudulent (tailgating) user, allowing only the passage of authorized users. The doors are closed between both users, considering the closing speed configured on the equipment, and it is accompanied of red light notifications on the pictograms and intermittent sound alarms.

This functionality conflicts with the anti-crush system and will not close the doors if the door can hit a user within the established safety area. The sound and light notifications will go off as usual.

Factory preset:

- Allow “tailgating” user = Enabled.

6.5.11 Asset safety zone definition

To increase the environment’s access control safety, dGate has a feature to set an asset safety zone; when configured, dGate will only open its doors when the authorized user enters the safety zone.

With this functionality enabled, the user’s passage credits are deducted during the authorization presentation, with the visual and sound notifications of passage authorization. On its turn, the doors will be opened only when the user enters the asset safety zone (Zone A).

The asset safety zone’s goal is to decrease the door opening period, reducing the possibility of fraud to the access control system.

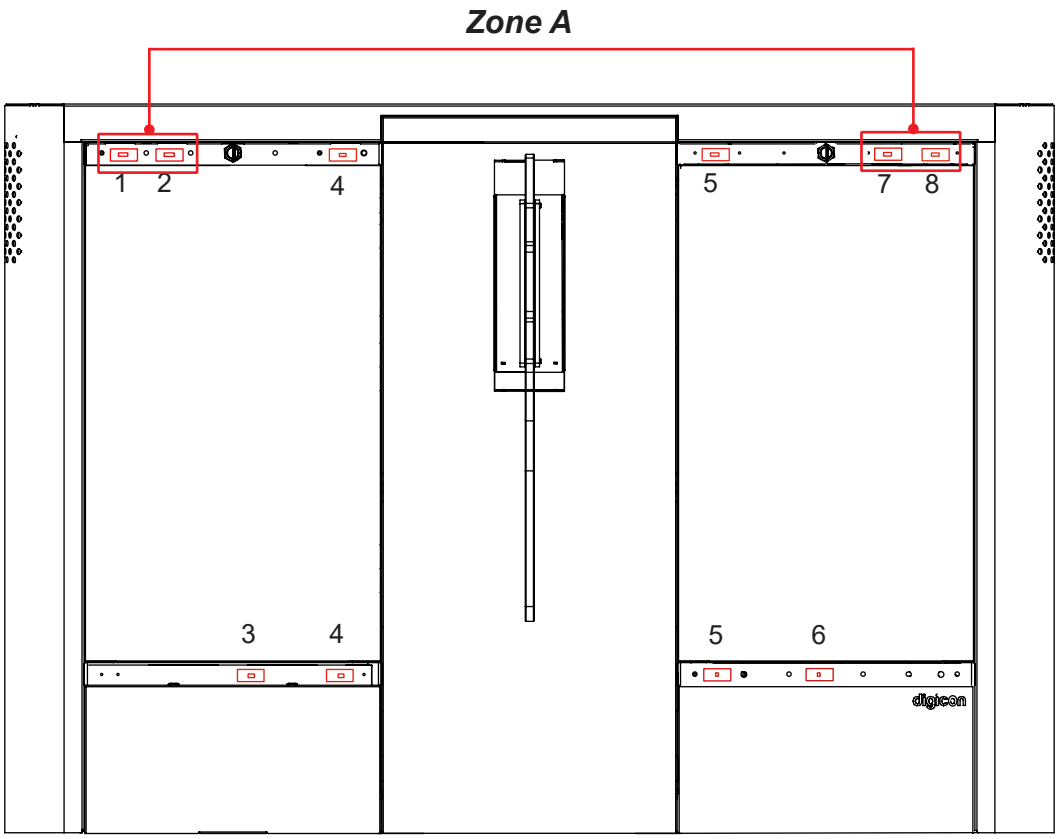

6.5.12 Passage authorization accumulation

The passage authorization accumulation is classified as the possibility of a user to authorize more than one passage without (successfully) concluding the first authorized passage. When enabled, this functionality will affect both entrances and exits, and can be used by any user with credits enough for more than one passage.

In practical terms, this functionality allows a user with enough credits to authorize more than one passage on the same direction and to authorize the access to other unauthorized users.

Factory preset:

- Passage authorization accumulation = Disabled.

7. Optional Items

Despite its compatibility with most access control technologies currently available, Digicon also offers a series of optional items that allows you to enhance and adjust dGate's functioning to the client's needs. See below a description of each one of these items.

7.1 Card collector kit

The collection kit with urn has a collection and retention device for cards and tags. It is ideal for places where there are visitors or occasional users. The kit is composed of an opening, a retention device activated by solenoid, and a storing urn.

The picture below presents the items that come with the collection kit with urn and can be used to assemble it.

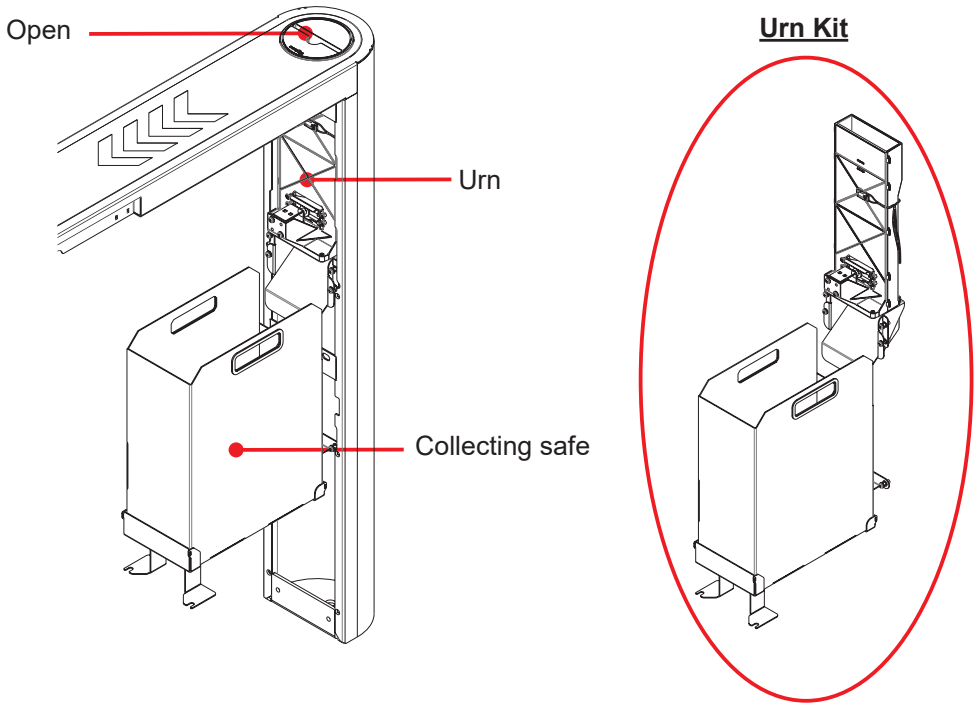

7.2 Digicon MCA board

dGate can have a smart controller called MCA (Access Control Module). The MCA is composed of a powerful, versatile control board that integrates access and checkpoint control systems and programs, adding robustness and functionality to different solutions, and being responsible for managing identification readers (contactless cards, bars, fingerprints, etc.), which can be present in the equipment and used to validate the users. Its TCP/IP network quickly and reliably consults databases and its great local storage capacity allows the equipment to operate offline, consulting and storing access data. With security doors, there are options of proximity card readers (RFID or MIFARE), and the barcode model, which are easily recognized by the user, decreasing the transaction time. The digital fingerprint biometry solution offers a great option, with performance, ergonomics, and safety for access and frequency control projects. It can be integrated in a 1:N or 1:1 application with the card technology.

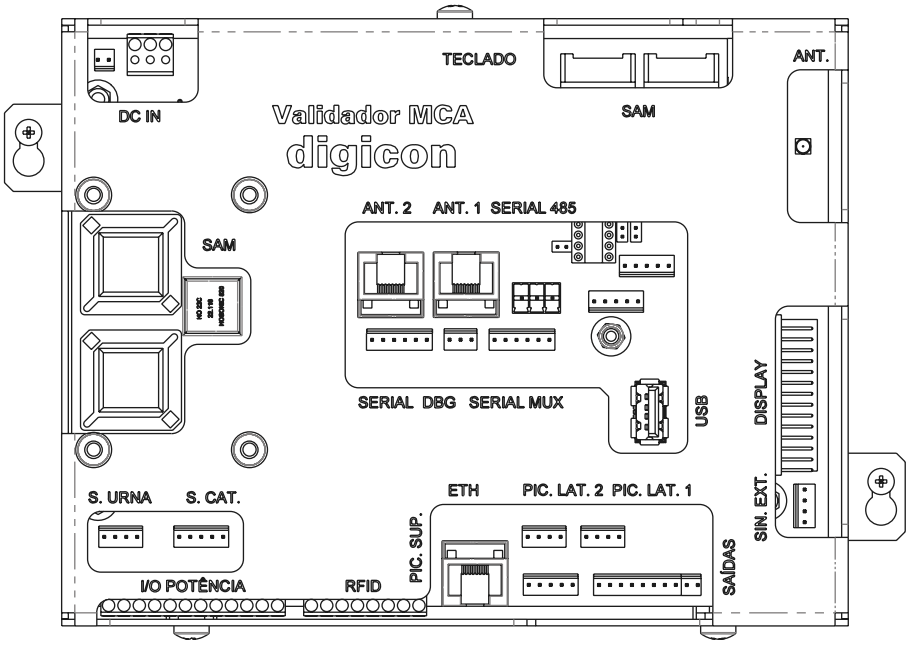

8. Maintenance

8.1 Door

At every six months, you will need to verify the doors' support fixation.

This adjustment should be executed with a torque wrench in the value 17 N.m.

Fixation points: ◯

dGate SW mechanism:

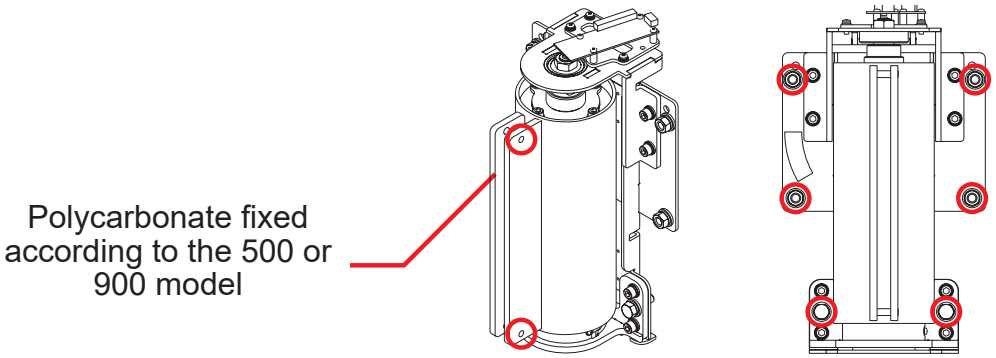

dGate SW mechanism:

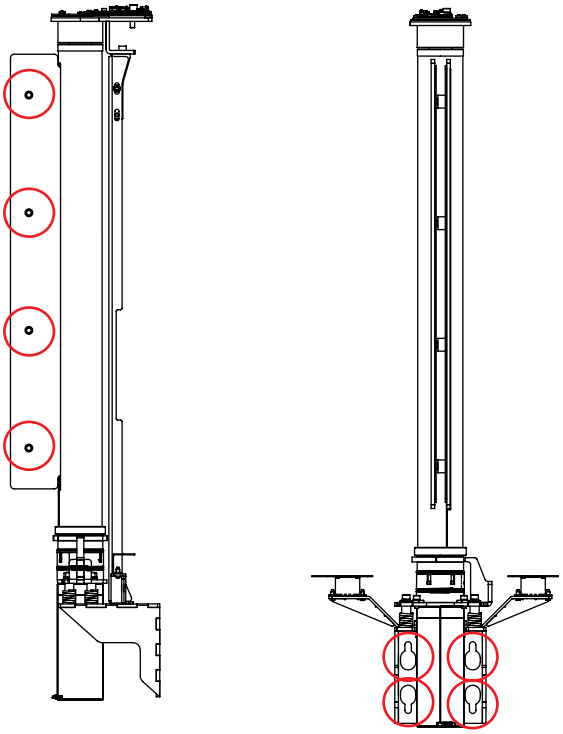

8.1.1 Calibration routine

The zero position of the encoder depends on the magnet's direction, which can vary depending on the mechanism. Since you cannot adjust the magnet's direction, sometimes you will need to calibrate the equipment's doors. The calibration process consists on storing the positions of both ends (maximum positions, limited by the equipment's mechanical configuration) and of the door's central position.

dGate's door calibration should be done individually (dGate R and T) and can be performed by the following process:

- Press the S1 button of the motor's controller board for 3s:

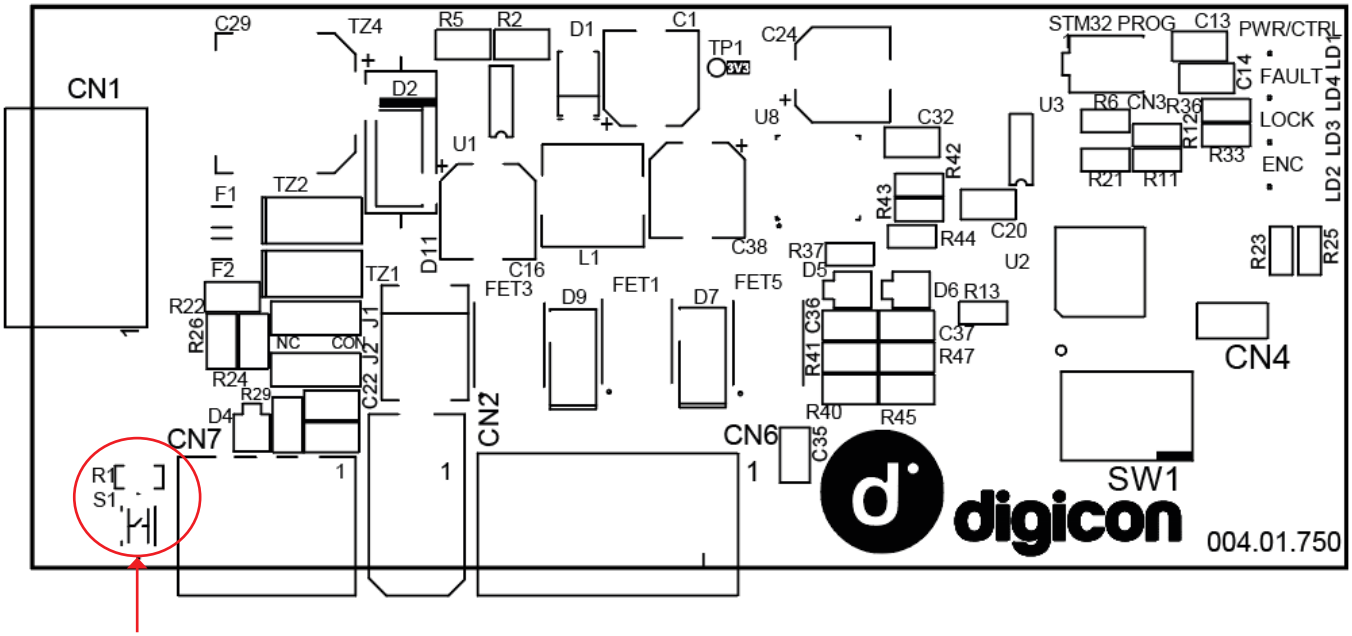

Door calibration button.

- The door will make a bidirectional movement, reaching the counterclockwise limit, the clockwise limit, and then calculating the medium point between both ends. The door should be positioned in the center;

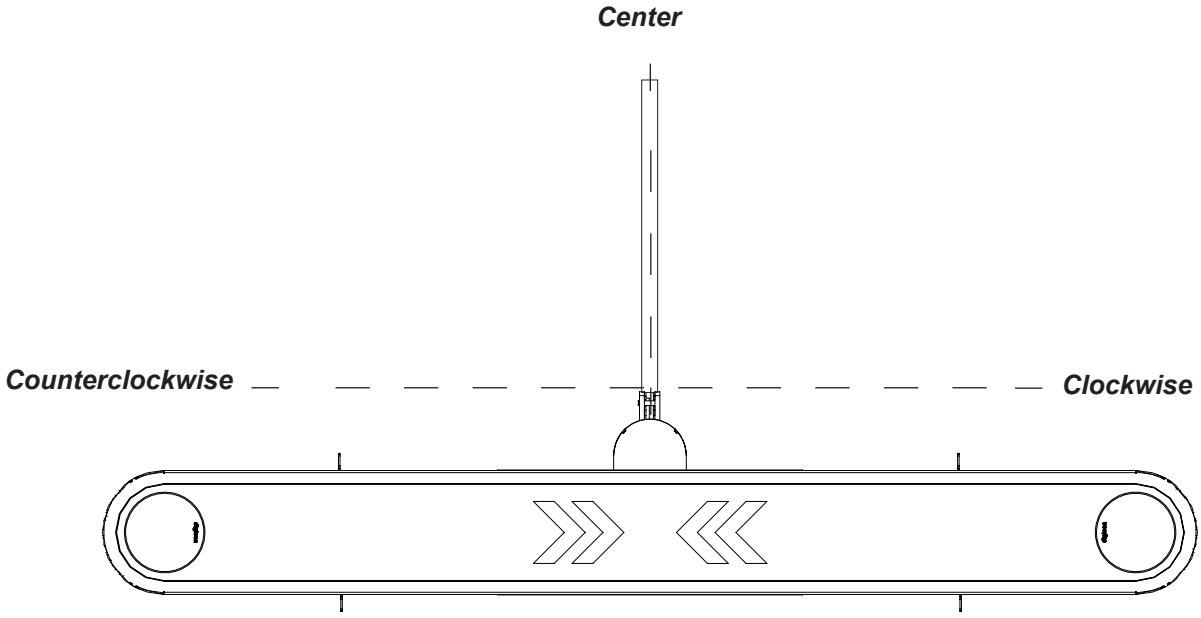

- In this moment, if necessary, the user can manually position the center by lightly moving the door to the desired position;
- Then, the calibration process should be concluded by pressing the S1 button of themotor's control board once.

8.2 Troubleshooting

Problems	Probable Causes	Action
dGate does not start	The equipment is not being powered by the AC network or the circuit breaker is off.	Check the circuit breaker and the electric network.
Sound notification without obstruction.	Passage sensor misaligned or with electric connection flaw.	Check if the equipment is perfectly aligned and then use the MCP tester software to identify which sensor(s) is(are) flawed.
Pictograms does not turn on.	Lack of AC power to the equipment, flaw of DC power in the equipment, open MCP fuse, broken cables.	Check the AC network, the MCP fuse, and the cables.
Pictograms showing wrong messages.	Loose display data cable or connection flaw in dGate's interconnection board.	Check the data cable and dGate's interconnection board.
When a passage is authorized, the doors open, but do not close	Check the gates' sensors; perhaps they think there is a user at the gates.	Use the MCP tester software to check the flawed sensor. Then, realign or replace the sensor.
Misaligned doors.	Door calibration.	Calibrate the doors.
Door mechanical brake.	Brake activation cable connection.	Check the connection of the brake's coil cable with the motor's control board connector.
	Motor's control board Dip Switch.	SW1-01 should be ON.

8.3 Preventive maintenance

The number of 1,600 passages/day in a 30-day month was established to estimate the preventive maintenance periods. Since these are reference values, they can change according to the client's utilization, and the proper adjustments should be made to calculate the new periods.

Calculation basis:

Cycle of passages: 1,600 (passage estimate in one day)

Month (days): 30

Cycles in one month: 48,000

Cycles	Maintenance Month
300,000	6 months
500,000	10 months
1,000,000	22 months
1,500,000	32 months

8.3.1 Preventive action table

Action	Frequency
Calibrate the doors	1x / 3 months
Assess the doors' functioning, looking for noises, heavy mechanisms, and unusual activations.	1x / 6 months
Assess the equipment's activation of the upper LEDs.	1x / 6 months
Assess the entrance and exit pictogram's activation.	1x / 6 months
Assess the buzzer activation through validations and unauthorized entrances.	1x / 6 months
Assess the 24V voltage of the motor's power supply units.	1x / 6 months
Assess the doors' mechanical brake functioning.	1x / 6 months
Assess the biometric readers' functioning.	1x / 6 months

Action	Frequency
Assess the contactless card readers' functioning	1x / 6 months
Verify if the doors' fixation screws are tight.	1x / 6 months
Visually check the keys.	1x / 6 months
Assess the motor's functioning.	1x / 22 months
Visually check the condition of the doors.	1x / 6 months
Verify the locks' functioning.	1x / 22 months

Preventive Maintenance Logs

Manufacturer	
Company: Digicon S.A.	Contacts: +55 51 3489.7000 www.digicon.com.br

Product		
Model:	Code:	Serial number:

Installation		
Company:	Contacts:	Date:

Action	Date	Responsible	Signature

9. Technical Characteristics

9.1 Dimensions

dGate UW:

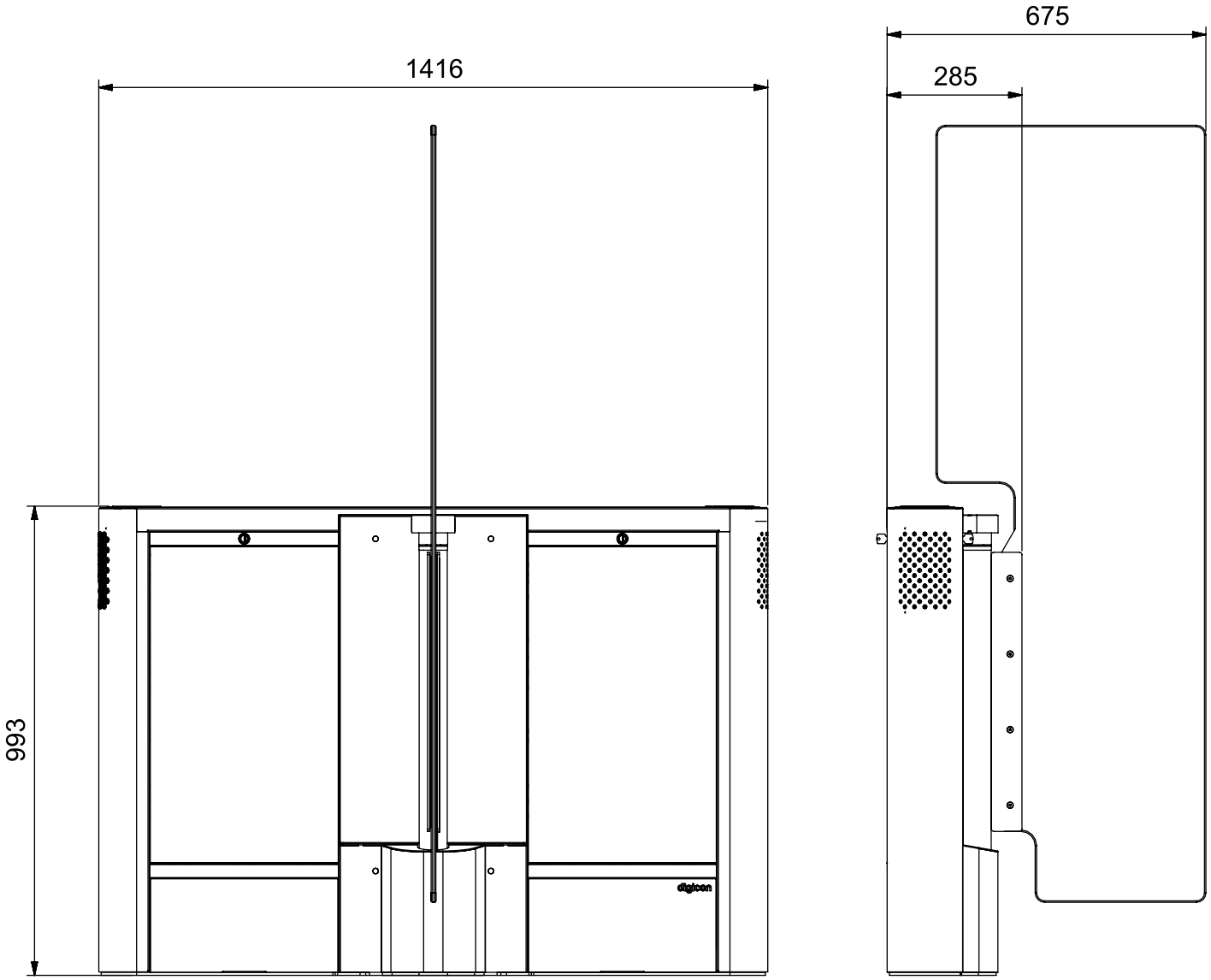

⚠ ***ATTENTION! -*** dGate's measures are illustrated in millimeters.

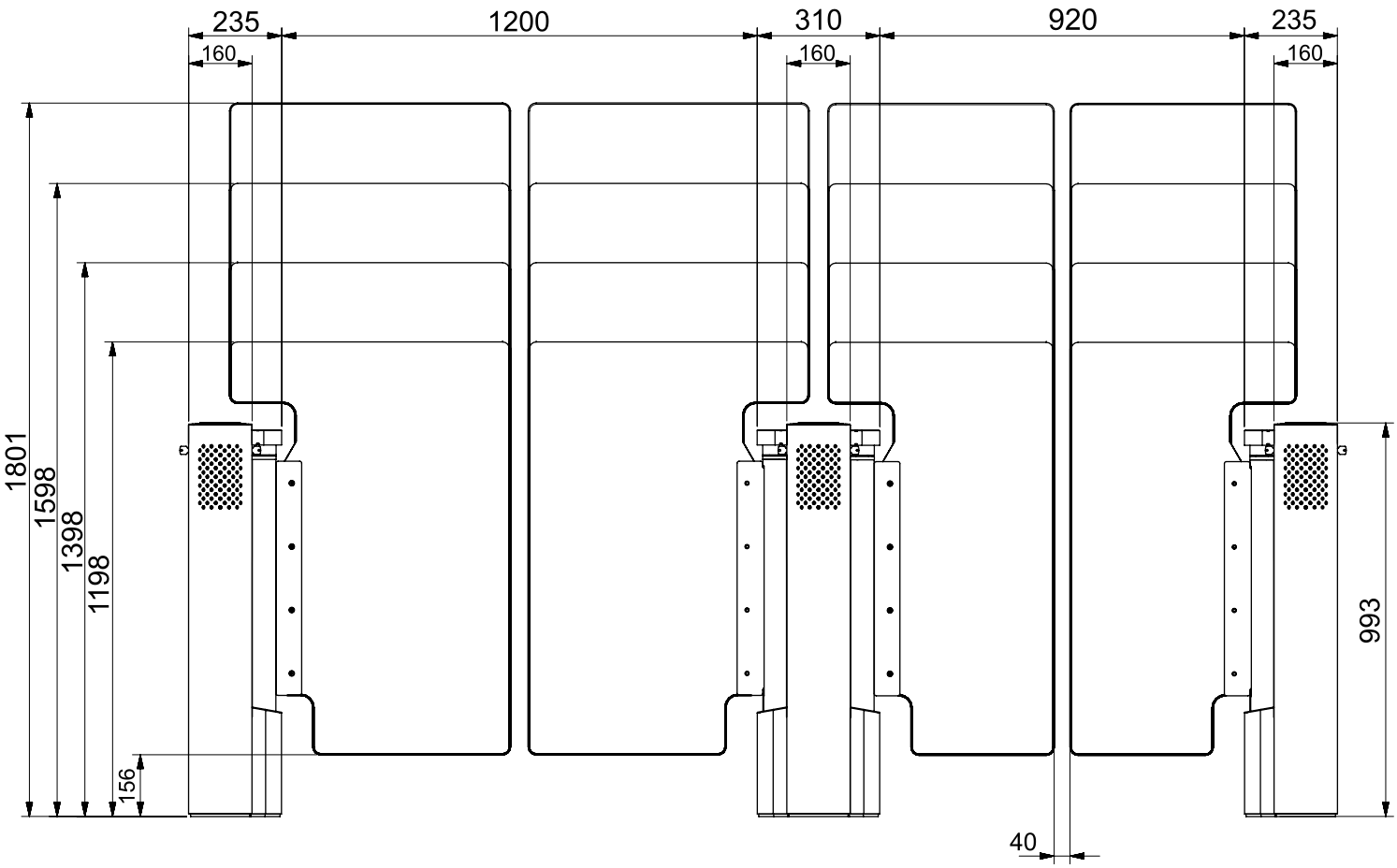

⚠ ***ATTENTION! -*** dGate's measures are illustrated in millimeters.

dGate SW:

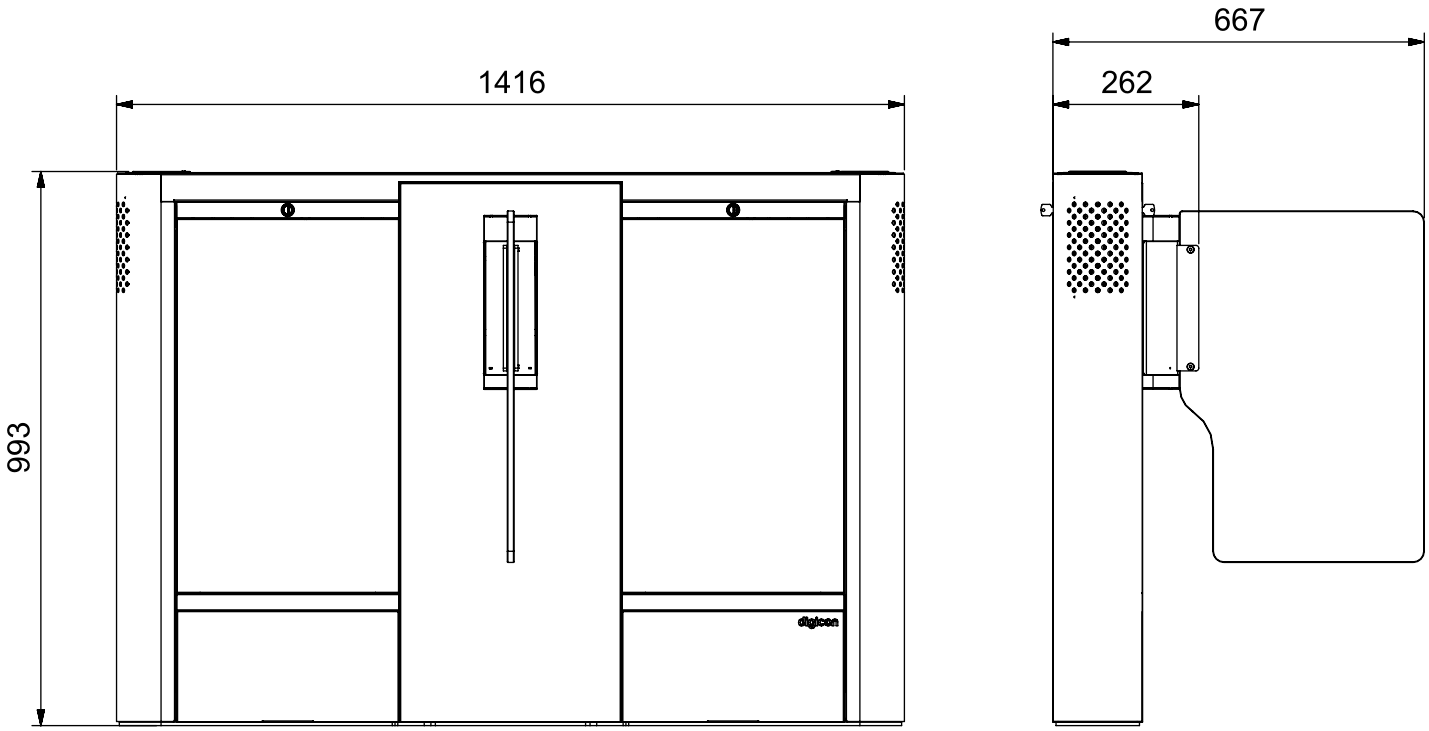

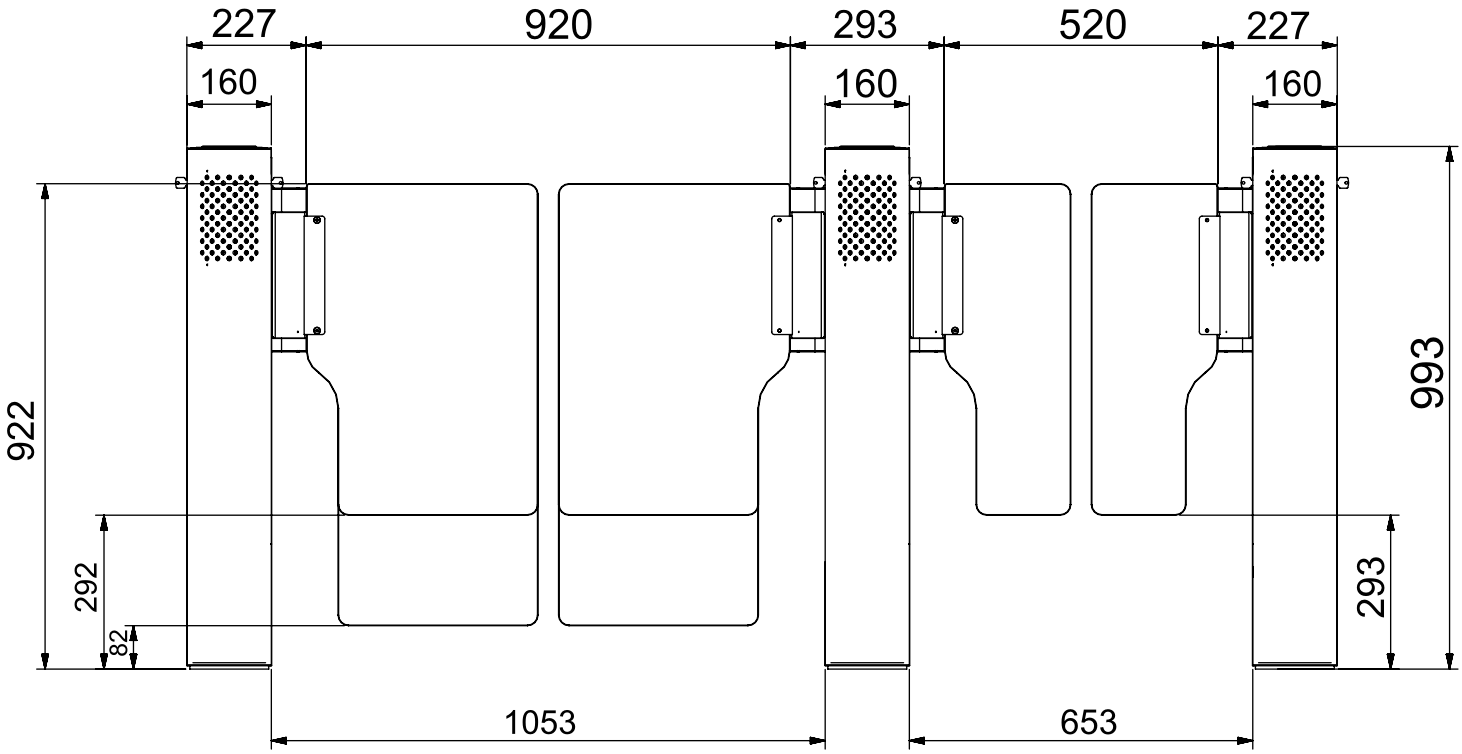

⚠ ***ATTENTION! -*** dGate's measures are illustrated in millimeters.

9.2 Other information

Technical data	Characteristics
Power source	100 - 240 Vca (Automatic selection)
Frequency	50/60 HZ
Mean door opening/closing time	1 second
Mean operation cycle time	6 seconds
Weight	150 kg by packed module
Consumption	**SW and UW** **Power-up:** 49W **Standby:** 18.6W **Operation:** 42W
Maximum capacity of cards in the collecting urn	120 cards
MCBF (Mean cycles between failures)	Over 5,000,000 cycles
Operation temperature	(-5° e 50°C)

10. Cleaning

10.1 Stainless steel maintenance and conservation

Do not use domestic chemicals, bleach, or cleaning products;

- **Routine cleaning:** The best products to preserve stainless steel are water, soap, soft and neutral detergents, and ammonia-based removers, diluted in lukewarm water and applied with a soft cloth or a nylon sponge. Then, rinse it with plenty of water, preferably lukewarm, and dry it with a soft cloth.

- **Fat, Oils, and Grease:** Clean thick build-ups with a soft cloth or towel paper. Then, apply a lukewarm solution of detergent or ammonia and follow the routine cleaning procedures.

- **Fingermarks:** Remove them with a soft cloth or towel paper moistened with isopropanol (found in compounding pharmacies) or organic solvent (ether, benzine).

- **Labels, tags, or films:** Remove them the best you can. Apply lukewarm water on the piece and rub it with a soft cloth. If it remains, dry it and rub it again with rubbing alcohol or organic solvent. Careful though: never scratch the stainless steel's surface with blades, spatulas, or rough abrasives materials.

- **Rust stains:** With a cotton swab moistened with water and nitric acid at 10%, rub it and keep the location moist for 20–30 minutes, repeating the operation if necessary.

Harder stains will require you to rub it more vigorously with a paste made with fine domestic abrasive material (Sapólio), water, and nitric acid at 10%, using a polishing sponge. Treatments with acid should always be followed by rinsing with an ammonia or sodium bicarbonate solution and the routine cleaning.

- **Moderate impurities/light stains:** When the routine cleaning is not enough, apply a paste made by mixing plaster or sodium bicarbonate diluted with domestic rubbing alcohol. Use a soft cloth or a nylon sponge to apply this mixture on the stainless-steel surface. If you prefer, use a soft-bristle brush also, but do not rub it. Move it as gently as you can, using long and uniform motions that go with the polished finish, if any. Avoid doing circular motions. Then, just rinse it with plenty of water, preferably lukewarm, and dry it with a soft cloth.

- **Intense Impurities/Hard Stains:** Apply lukewarm or hot detergent or an ammonia-based remover (home removers) and water. If it is not enough to soften burned food or charred build-ups, use more aggressive products, like caustic soda-based removers employed in house cleaning.

10.2 Polycarbonate (door) maintenance and conservation

Routine cleaning:

- Choose a dry day and preferably of low humidity; if there is soot on the door, it will be easier to remove it.
- If possible, it would be better to remove the polycarbonate item (door) to facilitate the cleaning process.
- Rinse the polycarbonate doors with water. Do it until you see the excess of impurities is detached. We insist in the proper amount of water, otherwise if you wipe the soiled polycarbonate item with a cloth, you would be sanding it, not cleaning it. The result would be a dull, lackluster (matte) door.
- Use a (100%) cotton cloth and a good neutral detergent. Do not use conventional brooms; they scratch the polycarbonate item.
- Mix the neutral detergent with water in a bucket until there is foam and gently apply the solution with the cloth in a single direction (to where the water falls). Never do circular motions with the cloth. Rinse well and repeat the process until you get a satisfactory result.
- Do not let the product exposed to the sun to dry. It can create spots.

Paint droplets on the polycarbonate item: When the walls are painted, it is usual to appear latex paint droplets on the polycarbonate board. Do not use solvents, like thinner, gasoline, benzine, or acetone. Isopropanol or kerosene can solve the problem. Try to clean it before the paint dries out and wash the region with a solution of water and neutral detergent.

Cleaning frequency of the polycarbonate item: There is not a right moment to clean it. The amount of soot on the air, produced on the streets by dirt, and surrounding factories, and constructions, may demand more frequent cleaning. Start by cleaning it every month and make an assessment. Then, adapt this period to a more convenient one. Clean it without scratching.

⚠ ***ATTENTION! -*** Even with more resisting impurities, start with softer cleaning methods. Be patient and repeat the operation a reasonable amount of times before resorting to more aggressive ones.

11. Warranty and Customer Support

Digicon takes responsibility by the project, good labor, and materials employed to manufacture its products, ensuring that the equipment and all its parts are free from defects or material and manufacture vices. Digicon shall replace or repair any part or equipment that has manufacture flaws, without additional obligations to the buyer, within the conditions established below:

1. The buyer shall pay for the product's dispatch and return transportation;

2. The warranty term is counted from the sales invoice's issuance and includes: 12 (twelve) months for the equipment, accessories, parts, and pieces, including the legal warranty period of 90 (ninety) days.

   Legal Warranty:

   "The consumer shall have the period of 90 (ninety) days, counted from the purchase invoice's issuance, to complain about apparent irregularities (vices), easily and immediately seen on the product, such as the items that compose the outer part and any other accessible to the user, as well as the pieces visible to the user and general accessories."

3. The warranty shall be extended to the buyer only through presentation of the invoice (original or copy). The service shall be performed by placing a service order through the emails:

   - **Access and Checkpoint Control Area:** sac.vca@digicon.com.br
   - **Urban Mobility Area:** sac.mobilidadeurbana@digicon.com.br
   - **Information needed to place a service order:**

Company Name:
CNPJ:
Full Address:
Name of the Responsible Party:
Telephone for Contact:
Model(s) of the Flawed Equipment:
Serial Number(s) of the Flawed Equipment:
Flaw(s):

Notes:

Head Offices/RS

Development, Factory, Customer Support, and Sales

Rua Nissin Castiel, 640 - Distrito Industrial.

Gravataí/RS CEP 94045-420 - Brazil

Email: vendas.acesso@digicon.com.br

www.digicon.com.br/en